Geological Survey of Finland
Circular Economy Solutions
Outokumpu

December 19, 2023

GTK/884/03.01/2020
Open File Work
Report 65/2023

Preliminary flotation tests on Aitolampi drill core samples

Tero Korhonen

Simon P. Michaux

GTK Open File Work Report

GEOLOGICAL SURVEY OF FINLAND **DOCUMENTATION PAGE**

Dec 19, 2023 GTK/884/03.01/2020

Authors Tero Korhonen Simon Michaux	Type of report GTK Open File Work Report Commission by Business Finland, BATCircle2.0 Project
Title of report Preliminary flotation tests on Aitolampi drill core samples	

Abstract

Preliminary graphite flotation tests were performed with five ore samples from the Aitolampi deposit. The best results were achieved with samples XA3-AE and YA4-AE; graphite concentrates with 94–96% carbon grades were produced with 56–93% recoveries. With other samples (QA2-AE, ZA5-AE and PA1-AE), the carbon grades were clearly lower in the final concentrates.

The regrinding improved the quality of the final graphite concentrates. Anyhow, when the 30–40 µm regrinding was used, graphite depressed heavily in the cleanings. The finer particle size and increased surface area would have required higher collector dosages. Major part of iron (pyrrhotite) was removed by magnetic separation with low graphite losses, also the sulphur contents in the tailings were lower.

Interestingly, the best results were achieved with the lower carbon grade feed samples, both grades and recoveries were higher in the final concentrates. More tests would be required to optimize the cleaner flotation and regrinding stage. Probably, the rougher stage could be shortened, too because the graphite flotation kinetic was fast. Also, the mineralogical studies of concentrates could provide information about the liberations and associations of graphite.

Keywords
graphite, flotation

Geographical area
Heinävesi, Finland

Other information
The report is deliverable D3.1.2 of the BATCircle2.0 Project, funded by Business Finland

Report serial GTK Open File Work Report		Archive code 65/2023	
Total pages 26 p., 108 app. pages	Language English	Price	Confidentiality Public
Unit Circular Economy Solutions		Project code 50404-4021027	

Signature/name Emmi Heikkilä Team Manager	Signature/name Tero Korhonen Senior Scientist
	Signature/name Associate Professor Simon P. Michaux - Circular Economy Solutions KTR

Contents

1. INTRODUCTION

Bench scale flotation tests were performed for five different drill core samples from Aitolampi deposit located in Heinävesi, Finland. In general, the test work included grinding-, flotation- and magnetic separation tests. The purpose of this test work was to find out how pure graphite concentrates could be produced by flotation; the target carbon grade was 95%. This report is deliverable D3.1.2 of the BATCircle2.0 Project, funded by Business Finland.

2. THE AITOLAMPI DEPOSIT

The Aitolampi graphite prospect is owned by Beowulf Mining plc, which is a UK registered exploration and development company. In 2016, a deposit was discovered 40 km southwest of Outokumpu at Heinävesi (Beowulf Mining 2022). The location on the Finnish map is shown in Figure 1.

Figure 1. Aitolampi graphite prospect location (modified from Google Earth 2022).

The project is still in the exploration stage. In 2021, the Finnish Safety and Chemicals Agency (Tukes) authorized an extension for the previous exploration permit, and now ongoing exploration can continue till 2024. The 407.4 ha exploration area (Pitkäjärvi, ML2016:0040) is shown in Figure 2.

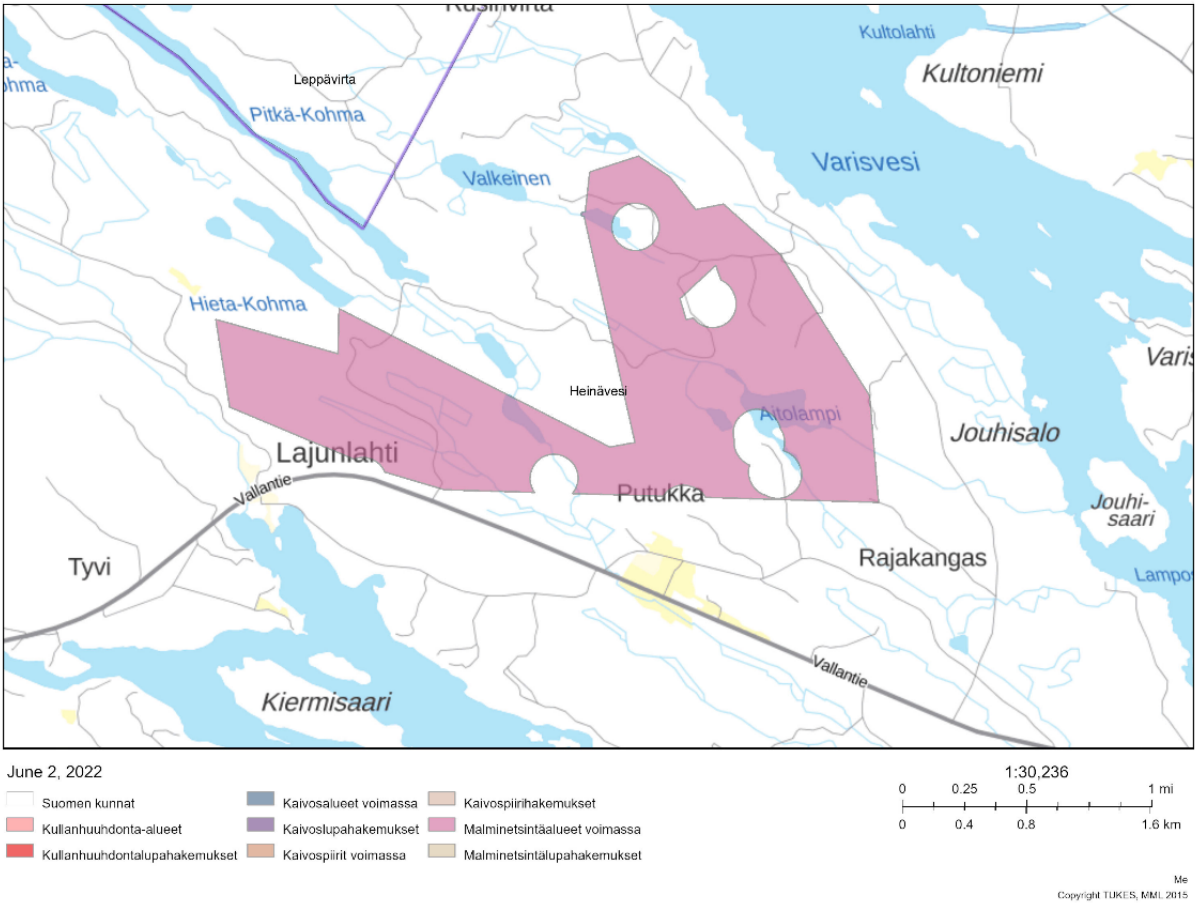

Figure 2. Aitolampi exploration area marked on red (©Tukes; MML 2015).

The latest mineral resource estimation (MRE) was conducted on August 28th, 2019. According to the global JORC Code (2012 edition), the indicated and inferred resource of 26.7 Mt at 4.8% Total Graphitic Carbon (TGC) for 1 275 000 tons of contained graphite was estimated. For the whole deposit, the estimated sulfur (S) content was 4.7% (Beowulf Mining 2022).

2.1 Mineralization and metallurgy

The Aitolampi graphite schist occurs on a folding limb within a high-metamorphic quartz-feldspar-biotite gneiss. The graphite mineralization is found in two zones, which are referred to as the eastern and western lenses. The drill program has confirmed a strike length of at least 525 m for the eastern zone and 530 m for the western zone (Beowulf Mining 2022). The mineralization zones with MRE data are presented in Figure 3.

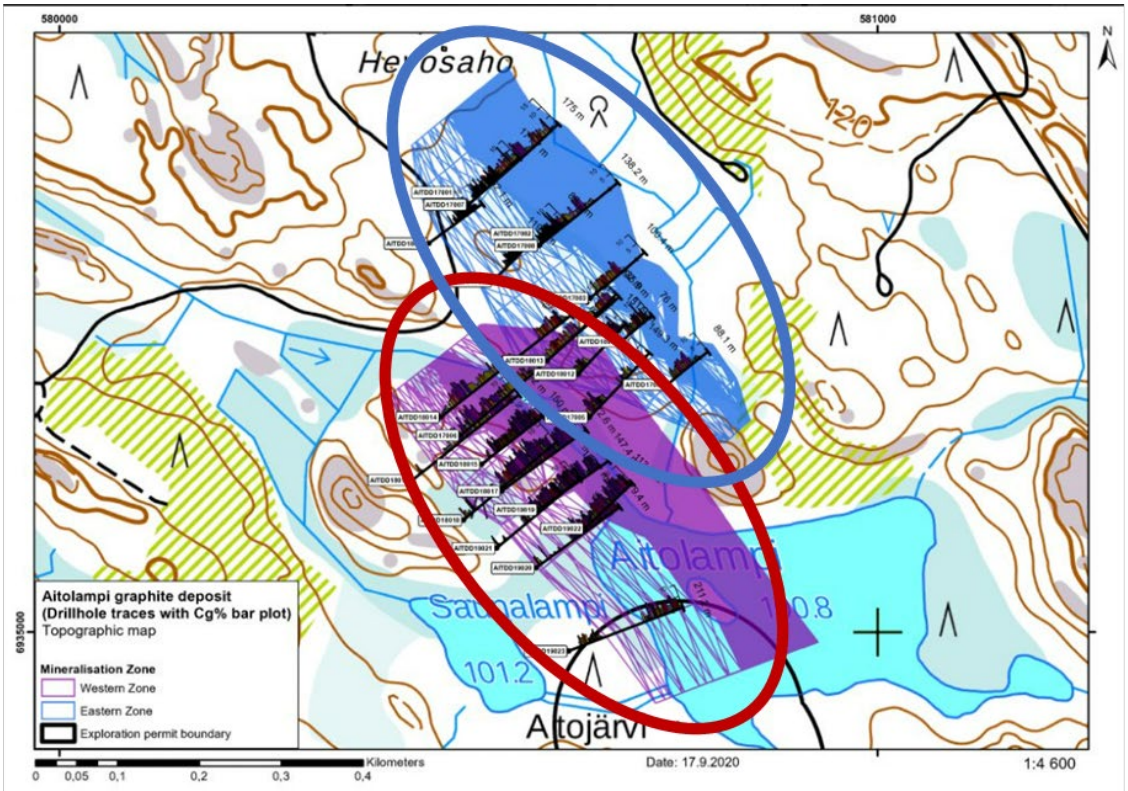

Western zone: Indicated + Inferred = 17.2 Mt @TGC 5.2%; S 4.8%

Eastern zone: Indicated + Inferred = 9.5 Mt @TGC 4.1%; S 4.5%

Figure 3. Aitolampi mineralization zones (modified from Beowulf Mining 2022).

Metallurgical test-work including purification and characterization tests for three composited quarter drill core samples MET-17001, MET-17002, and MET-17003 was conducted in 2017. Metallurgical test-work was performed by SGS Minerals Services in Canada and characterization was performed by ProGraphite Gmbh in Germany (Beowulf Mining 2022). The metallurgical test work result for drill core samples is shown in Table 1. In the table, the flake size is shown in µm and in Mesh, and the C(t) stands for total carbon grade.

Table 1. Metallurgical test results of Aitolampi ore (Beowulf Mining 2022).

Flake type			Fraction in %		
Flake size	Size in µm	Size in Mesh	MET-17001	MET-17002	MET-17003
Jumbo	> 300	< 48	1.6	0.6	0.6
Large	180–300	80–50	17	12.2	13.4
Medium	150–180	150–80	30	26.8	29.2
Fine	< 106	> 150	51.4	60.4	56.8
C(t) concentrate (%)			96.8	97.2	97.5
Open Circuit Graphite Recovery (%)			87.3	77.8	91.4

Based on the results (see Table 1) the graphite ore contains 0.6–1.6% jumbo sized flakes, 12.2–17% large flakes, and 26.8−30% medium sized flakes. The fines ranged from 51.4 to 60.4%. The overall recovery was 77.8−91.4% with a 96.8−97.5% carbon grade. According to Beowulf Mining (2022), there are multiple aspects which are benefiting the explored deposit in the LIB graphite markets. For example, with process optimization, the 99.95% purity, which is required for the LIB markets, may be possible to achieve. The studied graphite also shows high crystallinity, with a degree of graphitization of 98%, and the specific surface area is similar to that of high-quality flake graphite from China. In addition, Aitolampi graphite also has some other good features suitable for other applications like refractories, lubricants, and foundries.

3. SAMPLES

The purpose of this work was to attempt to contribute and advance the effective and efficient extraction of graphite from these ores. A series of samples from the Aitolampi, owned and operated by Grafintec, were selected after discussions with the staff. These samples were to represent each of the major rock type end member of the deposit. Preferred sample types were:

- High grade C, S, Fe, Ni Co, low grade Ba
- Low grade C, S, Fe, Ni Co, low grade Ba
- High grade C, S, Fe, Ni Co, high grade Ba
- texture that has lots of contaminants embedded into the graphite grains
- texture that has no contaminants embedded into the graphite grains

The required amount of rock was approx. 25 kg for each sample. Preference was given to maintaining a consistent rock texture across the samples.

3.1 The Five Orientation Samples Selected

Five samples were selected and delivered to GTK Mintec pilot plant at Outokumpu.

Figure 4. Five orientations samples selected for Aitolampi flotation study.

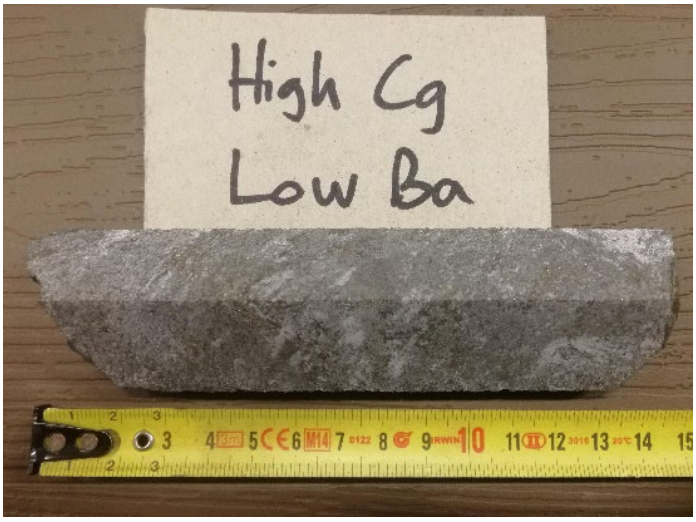

Figure 5. Aitolampi ore type, High Carbon, Low Barium – PA1.

Figure 6. Aitolampi ore type, High Carbon, Low Sulfur – QA2.

Figure 7. Aitolampi ore type, Medium Carbon, Medium Sulfur – XA3.

Figure 8. Aitolampi ore type, Low Carbon, Low Barium – YA4

Figure 9. Aitolampi ore type, High Carbon, High Barium – ZA5.

Five drill core samples about 25 kg of each were received for the bench scale flotation test work. The sample preparation and characterization of the samples was done in WP3.1.1 of the BATCircle2.0 Project and described in detail in Michaux *et al*. 2023. Anyhow, the drill core samples were crushed to < 3.35 mm particle size by jaw- and roller crusher. After this, the samples were homogenized individually by mixing and then suitable 1.5 kg sub samples were divided for the flotation test work.

The samples used in flotation tests:

- Drill core ore: High Carbon, Low Barium – Aitolampi PA1
- Drill core ore: High Carbon, Low Sulfur – Aitolampi QA2
- Drill core ore: Medium Carbon, Medium Sulfur – Aitolampi XA3
- Drill core ore: Low Carbon, Low Barium – Aitolampi YA4
- Drill core ore: High Carbon, High Barium – Aitolampi ZA5

Appendix 1 shows a summary of the characterization of Aitolampi ore samples (drawn from Michaux *et al.* 2023).

4. GRINDING TESTS

Prior to the flotation tests, some grinding tests were performed for the crushed -3.35 mm ore samples. The grinding was done with the mild steel rod mill. The used feed batch mass was 1 kg, rod charge 8 kg and water volume of 0.9 liter (Figure 10).

Figure 10. The primary grinding was performed with the mild steel rod mill.

The grinding behavior was somewhat similar with all ore samples. After 30 minutes grinding, the D80 varied between 79–95 µm (Table 2 and Figure 11). The detailed results are shown in Appendix 2.

Table 2. Aitolampi grinding tests, ground 30 minutes.

Sieve size (µm)	Passing %				
	XA3-AE	QA2-AE	PA1-AE	ZA5-AE	YA4-AE
500	100.0	100.0	100.0	100.0	100.0
250	99.9	99.9	99.9	99.9	100.0
150	98.2	97.5	98.4	97.3	98.1
125	96.0	95.2	96.7	94.9	95.2
90	82.0	82.7	86.9	83.3	77.5
75	69.3	71.8	77.6	72.9	66.3
63	56.5	59.9	66.8	61.5	56.0
45	36.7	41.0	46.7	40.9	37.8
32	25.6	29.7	34.3	28.8	27.9
20	18.2	22.1	26.2	21.8	20.9
D80 (µm)	**87.6**	**86.3**	**78.9**	**85.3**	**95.0**

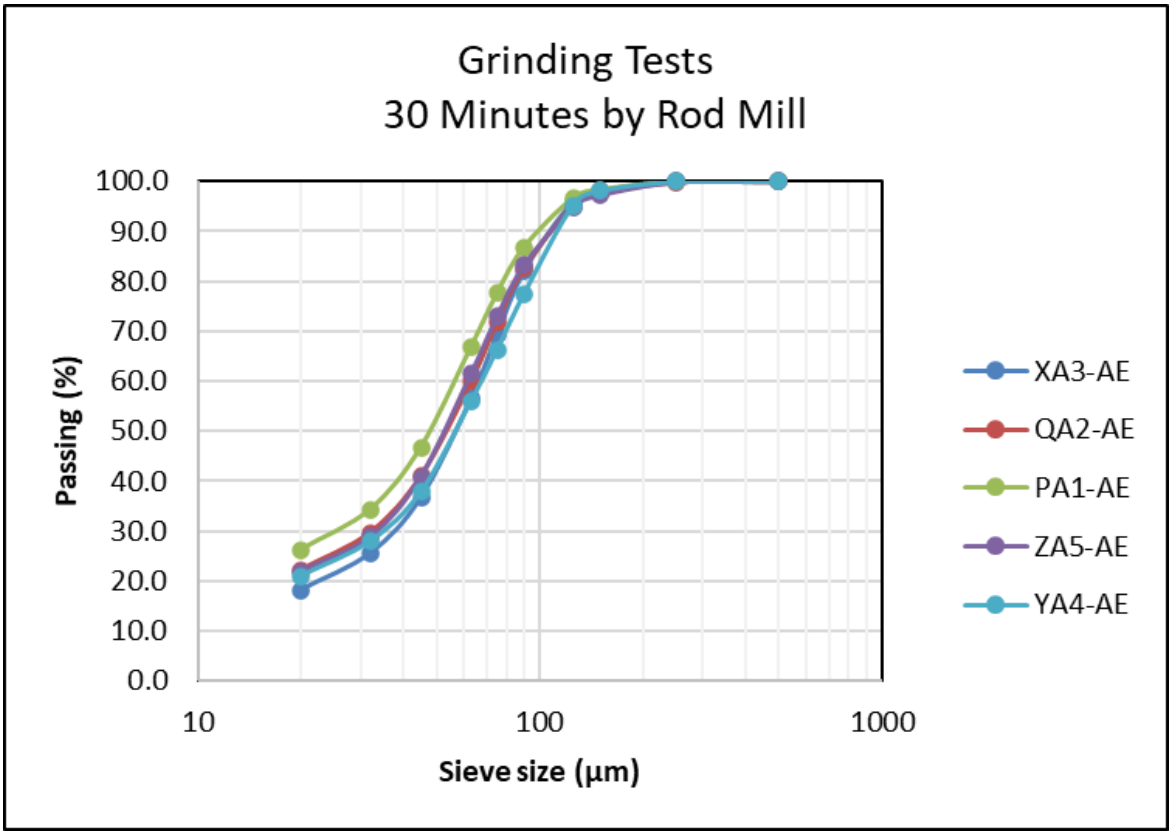

Figure 11. Aitolampi samples, grinding fineness after 30 minutes grinding.

5. FLOTATION TESTS

Overall, 4 to 6 flotation tests were done with each ore sample. The main test parameters were the grinding fineness, flotation chemicals and dosages, also magnetic separation was applied in some tests. The test program is described in the following chapters. The flotation test products were analyzed by XRF and LECO C methods, additionally ICP-OES were done, too. The chemical analyses were provided by CRS Laboratories Oy.

5.1 Rougher flotation tests

At first, one rougher flotation test was done with each ore sample to get an idea about suitable flotation times and chemical dosages. The rougher flotation tests were carried out with Outotec-GTK LabCellTM flotation machine (Figure 13). Tests were done with 1 kg ore batches. The used grinding time was 30 minutes and fineness varied between 79 to 95 µm depending on the ore sample. The rougher flotation was done in 4 liter flotation cell. The flotation air flow rate was 3L/min and stirring speed 1800 rpm. Totally four rougher concentrates RC1-4 were floated as time series (Figure 12). The flotation was done in natural pH. 500 g/t of sodium silicate (Na_2SiO_3) was used to depress silicates. Kerosene and MIBC were used as collector and frother, totally 120 g/t each. The overall flotation time was 15 minutes.

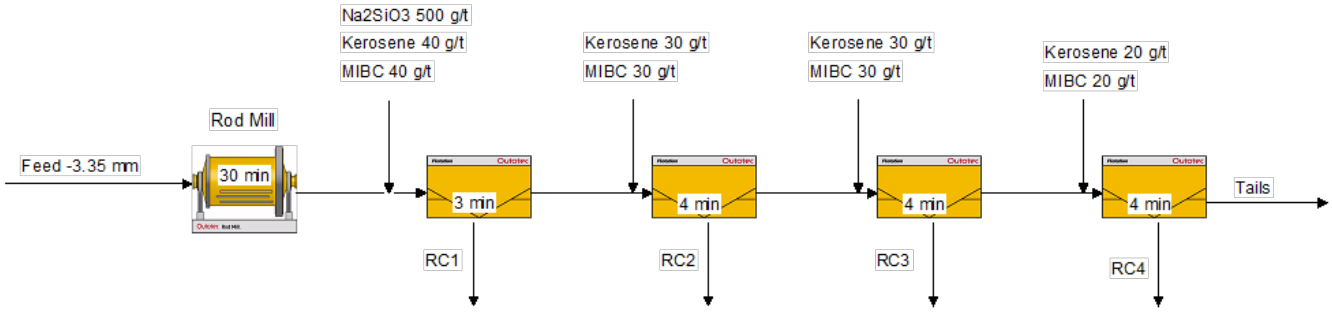

Figure 12. Test 1 flowsheet, graphite rougher flotation.

Figure 13. Outotec-GTK LabCellTM flotation machine and the rougher graphite flotation.

5.2 Cleaner flotation tests

Three to five cleaner flotation tests were done with each ore sample. In Test 2, the rougher flotation was done the same way as in the rougher flotation tests. Then the combined rougher concentrates RC1-4 were reground 10 minutes with mild steel ball mill. The used ball charge was 8 kg and water volume about 0.4 liter. The regrinding fineness was D80~89-104 µm depending on the sample. After regrinding, three cleanings were done in 1.5 liter flotation cell. The stirring speed was 1100 rpm and air flow 1.5 l/min. The used chemical dosages in the cleanings were Kerosene 30 g/t and MIBC 30 g/t.

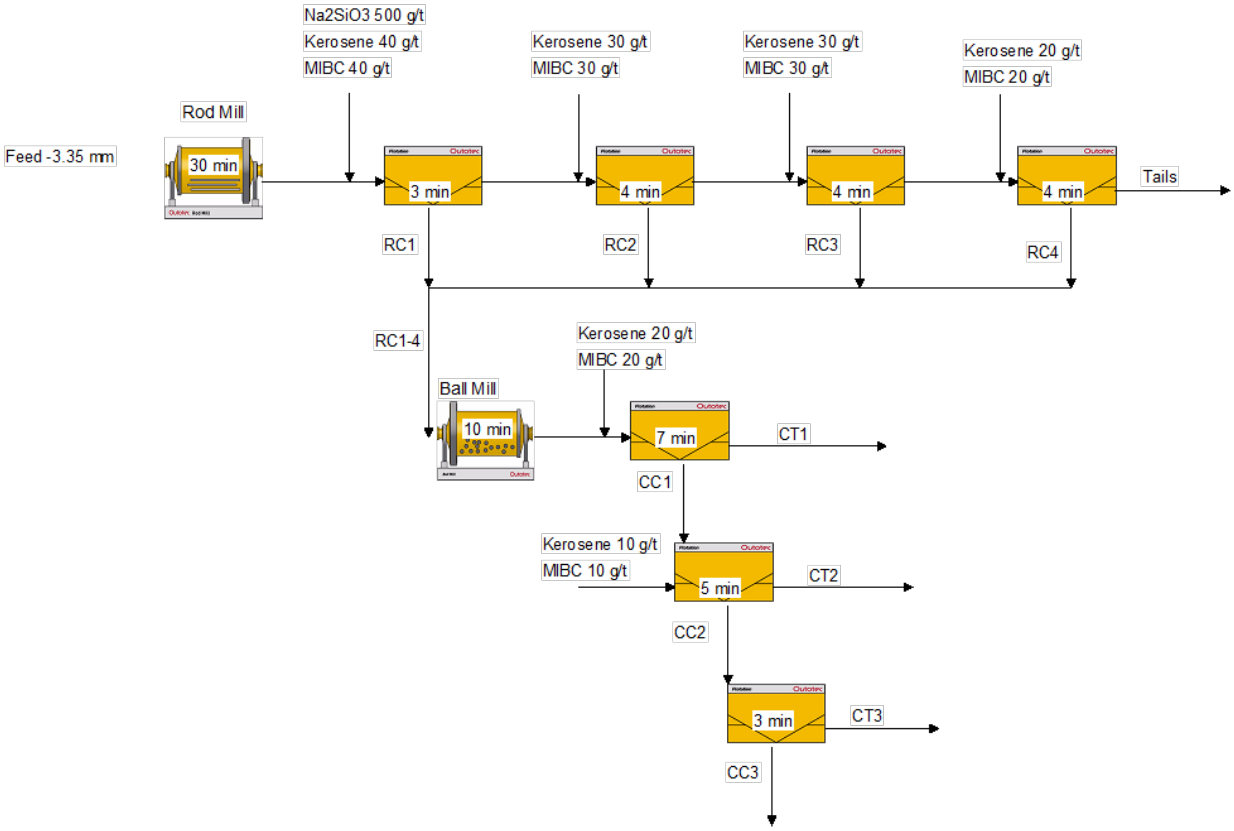

Figure 14. Test 2 flowsheet, graphite cleaner flotation.

Flotation test 3 was done the similar way as Test 2, except two stages magnetic separation was done prior to the rougher flotation with the low 0.07 T and medium 0.3 T intensity wet magnetic separators. In general, the ground material was mixed in the bucket and fed by the peristaltic pump to the magnetic separator. The used solids content in magnetic separation was about 10%. The non-magnetic product NM2 was then reported into rougher graphite flotation. Additionally, the regrinding time for the rougher graphite concentrate was increased to 20 minutes. The grinding fineness was about D80 73 to 98 µm depending on the ore sample. The purpose was to remove iron sulphides prior to the flotation by magnetic separation and reduce sulphur content in flotation tailings.

In flotation test 4, the flowsheet was simplified. Only one medium intensity magnetic separation 0.3 T (Tesla) was done prior to the rougher flotation. Based on the earlier rougher flotation tests it was decided to collect only two rougher concentrates RC1-2 because most of graphite was already floated after 7 minutes and after that mostly silicates were floated. The regrinding time was increased to 40 minutes, and smaller size grinding balls were used to improve the grinding performance and liberate the graphite particles. The regrinding fineness was about D80 59 to 83 µm depending on the ore sample.

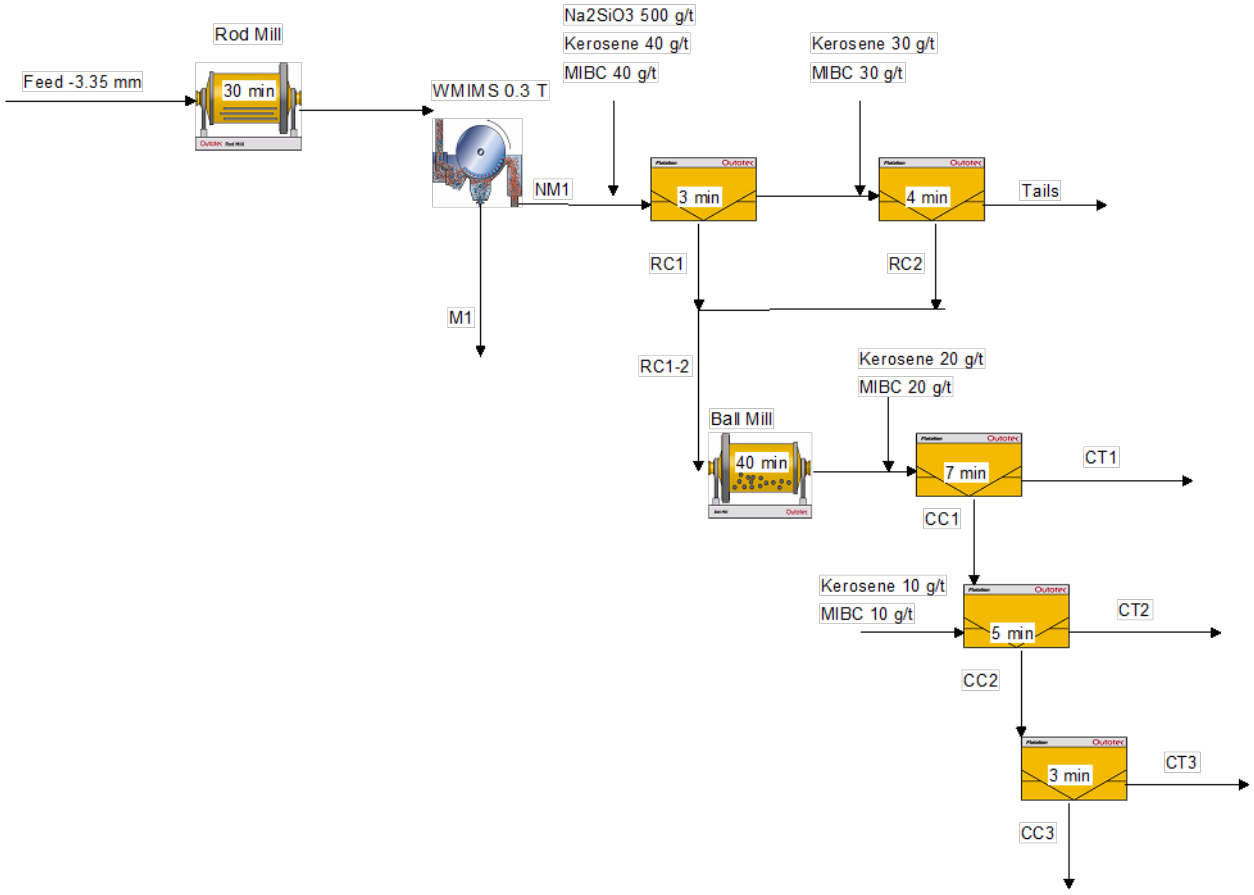

Figure 15. Test 4 flowsheet, graphite cleaner flotation.

The flotation process was adjusted slightly more in Test 5. The sodium silicate dosage Na_2SiO_3 was increased to 750 g/t in the rougher graphite flotation stage to depress silicates more effectively. Also 250 g/t of sodium silicate was used in the 1st graphite cleaning stage, too. The regrinding time was increased to 60 minutes and much smaller size of balls were used. The regrinding fineness was D80 32 to 40 µm depending on the ore sample. Additionally, the 4th cleaner flotation stage was added and small dosages of kerosene and MIBC were used in the 3rd and 4th cleanings, too.

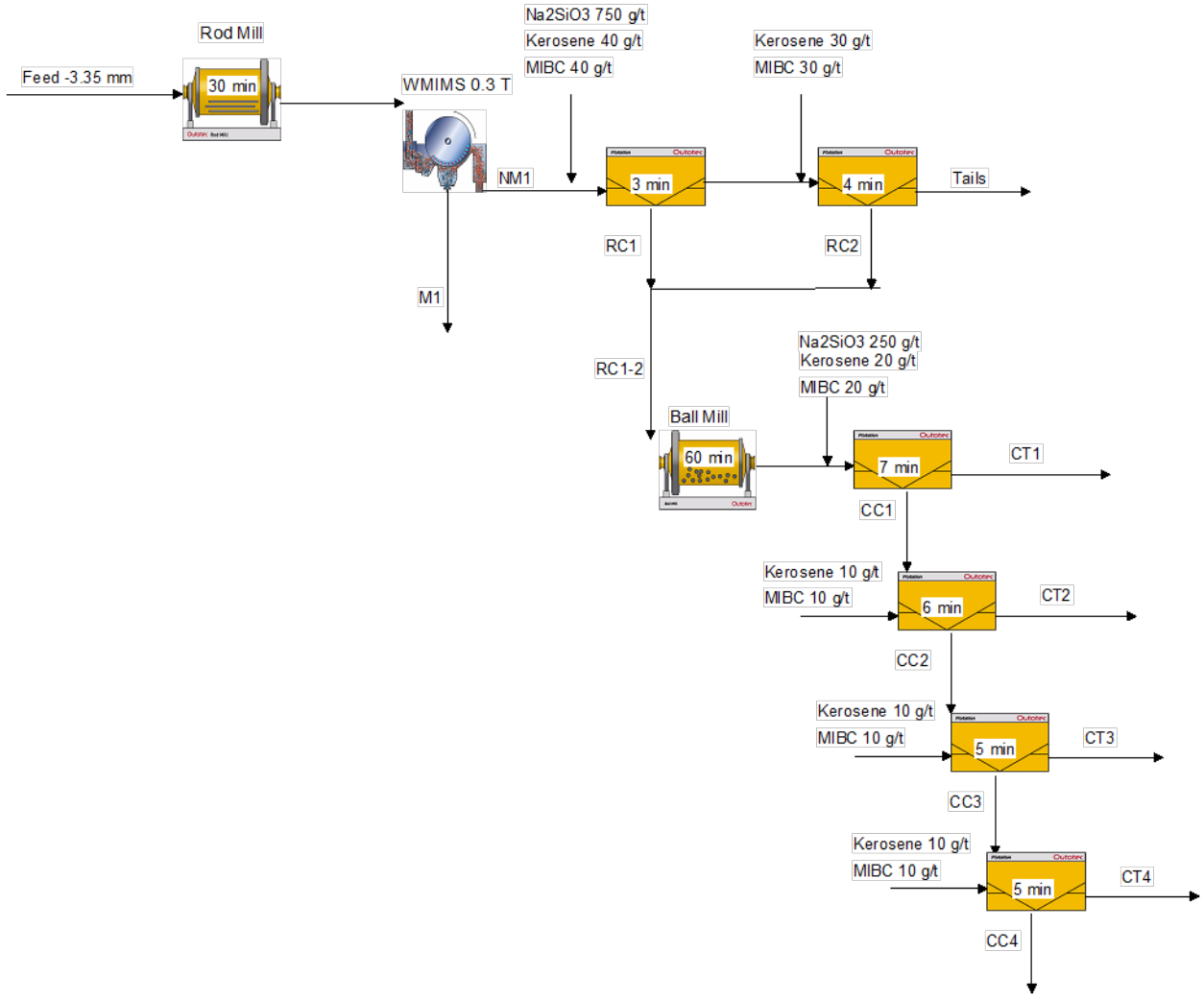

Figure 16. Test 5 flowsheet, graphite cleaner flotation, samples ZA5-AE, PA1-AE, and QA2-AE.

In Test 6, the similar flowsheet was used as in Test 5, except the used chemical dosages were reduced to the same level as in Test 4 and 5th cleaning stage was added.

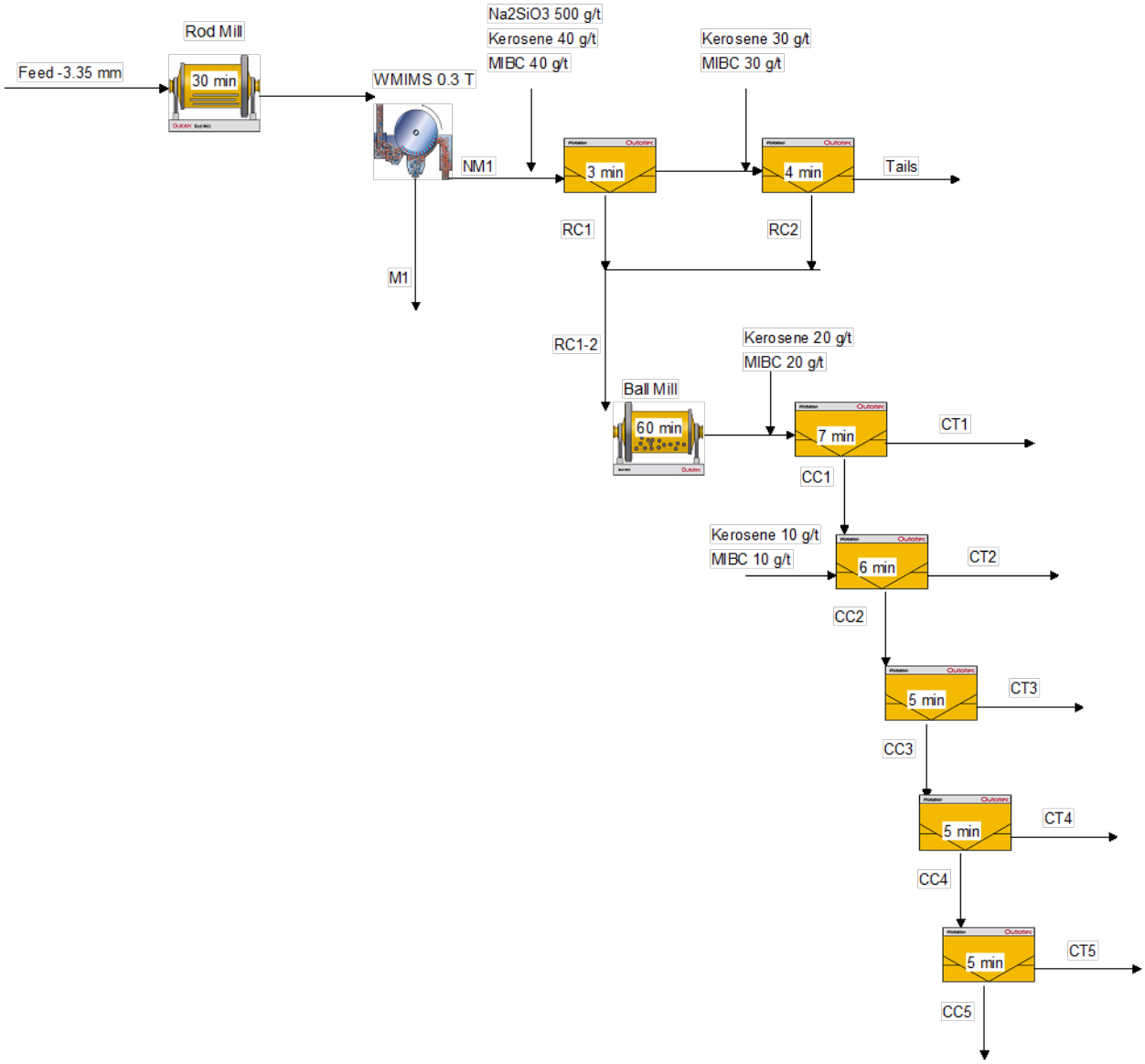

Figure 17. Test 6 flowsheet, graphite cleaner flotation, samples ZA5-AE, PA1-AE and QA2-AE.

6. TEST RESULTS

The main flotation test results are presented in the following chapters. The detailed results are shown in Appendices 3&4.

6.1 Rougher flotation tests

The main results from the rougher graphite flotation tests are shown in Table 3 and Figures 18 & 19. The overall carbon recoveries were high, 96 to 99%, in the combined rougher concentrates RC1-4 and the carbon grades were roughly from 28 to 41%. There was a high quantity of silicates in the concentrates, SiO_2 grades ranging from 30 to 41%.

The graphite was floated very fast. After 3 minutes of flotation, the carbon recoveries exceeded 95% for all ore samples, except for ore sample QA2-AE, where it reached about 77% (Figure 18). Therefore, very short flotation time would be enough. The rougher flotation could probably be ended already after the 2nd rougher flotation stage, because after 7 minutes of flotation, the carbon recoveries are not much increased anymore and mostly silicates were floated thereafter. The sulphur content in the flotation tailings was roughly 4 to 7%.

Table 3. The rougher graphite flotation test results, Test 1.

Test	Sample	Product	Mass		C (Leco)		SiO2 (XRF)		Al2O3 (XRF)		MgO (XRF)		Fe (XRF)		S (Leco)	
			g	%	%	Rec%	%	Rec%	%	Rec%	%	Rec%	%	Rec%	%	Rec%
1	XA3-AE	RC1-4	127.5	12.7	36.6	99.1	34.8	7.7	9.6	10.2	2.5	9.4	3.0	4.9	1.5	4.1
		Tails	872.6	87.3	0.0	0.9	61.2	92.3	12.3	89.8	3.5	90.6	8.7	95.1	5.2	95.9
		Calc. feed	1000.1	100.0	4.7	100.0	57.8	100.0	12.0	100.0	3.4	100.0	7.9	100.0	4.7	100.0
1	QA2-AE	RC1-4	159.4	16.0	36.1	98.9	32.1	9.3	9.8	12.4	3.7	12.8	4.3	9.2	2.5	8.4
		Tails	839.4	84.0	0.1	1.1	59.4	90.7	13.2	87.6	4.8	87.2	8.1	90.8	5.1	91.6
		Calc. feed	998.8	100.0	5.8	100.0	55.1	100.0	12.7	100.0	4.6	100.0	7.4	100.0	4.7	100.0
1	PA1-AE	RC1-4	216.1	21.6	35.9	99.0	32.8	14.1	10.5	19.7	4.2	17.3	3.8	8.9	2.1	7.3
		Tails	783.9	78.4	0.1	1.0	54.9	85.9	11.8	80.3	5.6	82.7	10.9	91.1	7.2	92.7
		Calc. feed	1000.0	100.0	7.9	100.0	50.1	100.0	11.5	100.0	5.3	100.0	9.4	100.0	6.1	100.0
1	ZA5-AE	RC1-4	174.7	17.5	40.8	99.5	30.1	10.0	9.6	13.9	3.5	12.3	3.3	7.0	1.8	6.5
		Tails	824.8	82.5	0.0	0.5	57.4	90.0	12.6	86.1	5.3	87.7	9.1	93.0	5.6	93.5
		Calc. feed	999.5	100.0	7.2	100.0	52.6	100.0	12.1	100.0	5.0	100.0	8.1	100.0	5.0	100.0
1	YA4-AE	RC1-4	97.3	9.7	27.6	96.3	40.9	6.5	11.3	8.5	3.1	8.7	4.3	6.4	2.0	5.3
		Tails	902.5	90.3	0.1	3.7	63.5	93.5	13.2	91.5	3.5	91.3	6.7	93.6	3.9	94.7
		Calc. feed	999.8	100.0	2.8	100.0	61.3	100.0	13.0	100.0	3.5	100.0	6.5	100.0	3.7	100.0

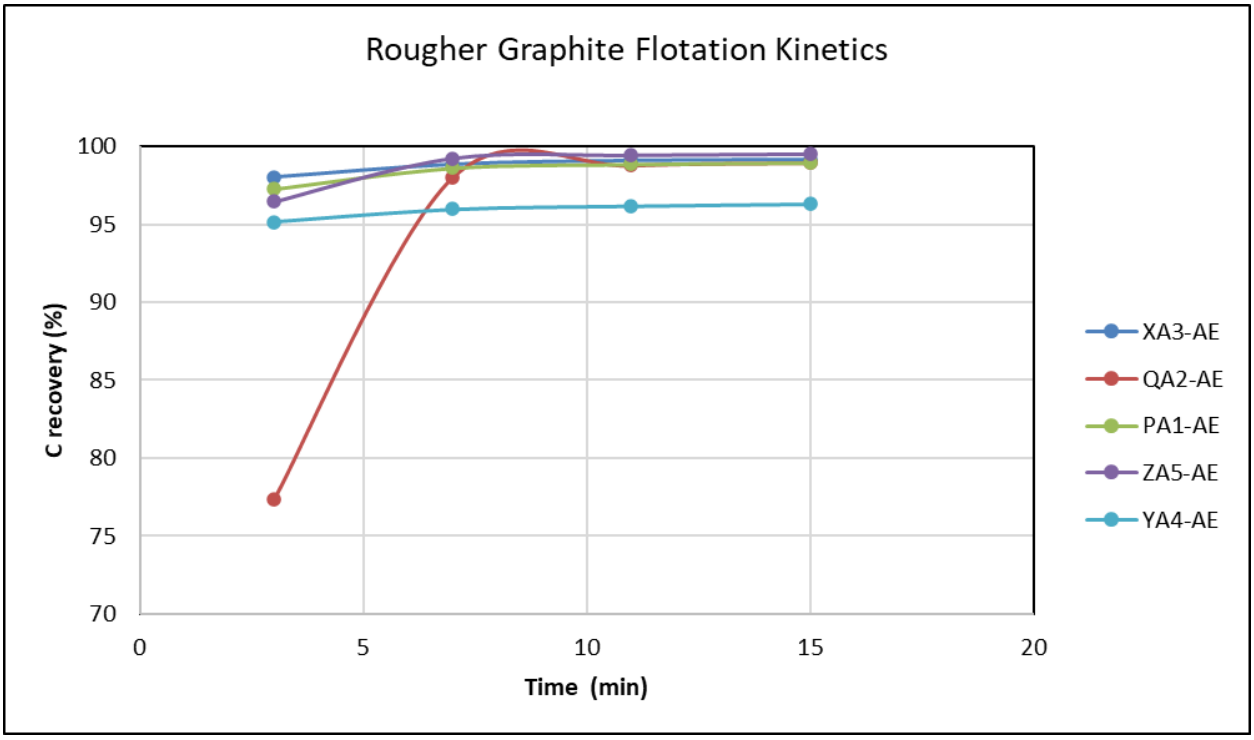

Figure 18. The rougher graphite flotation kinetics.

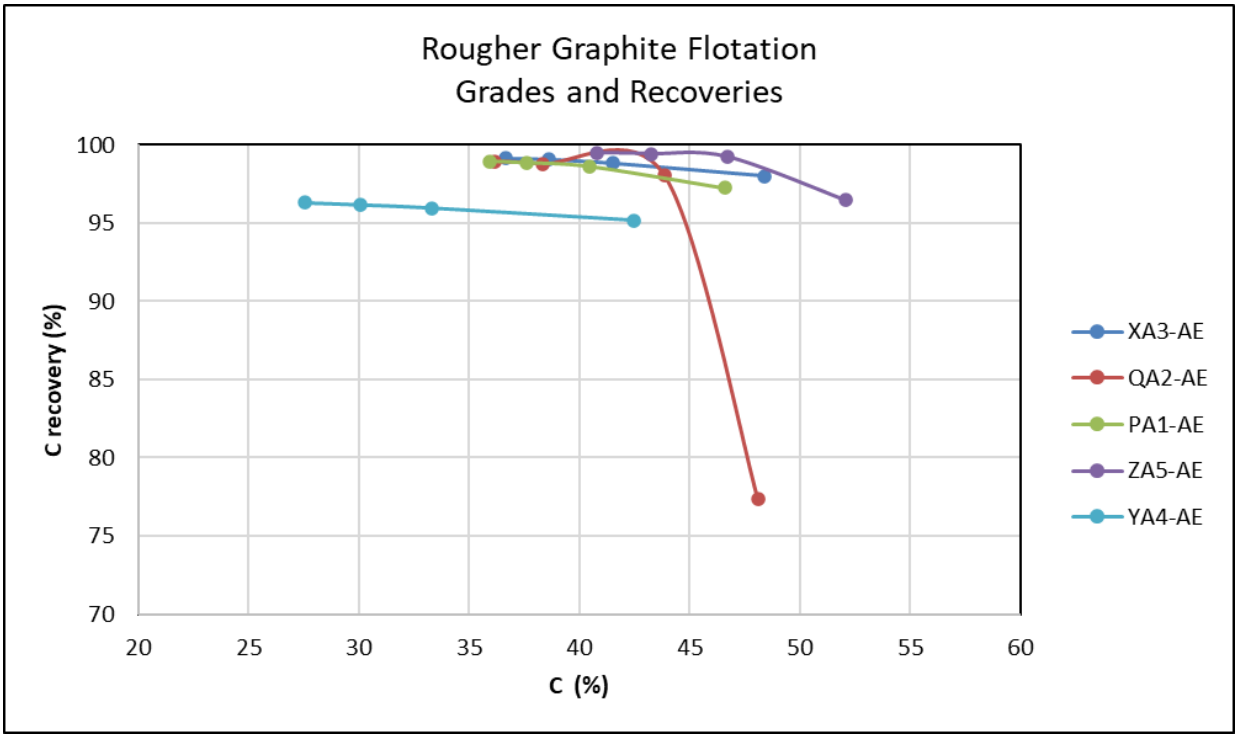

Figure 19. The cumulative carbon grades and recoveries in the rougher graphite flotation.

6.2 Cleaner flotation tests

The results from the cleaner flotation tests are presented for each ore sample separately.

Sample XA3-AE

The carbon recoveries in the rougher concentrates RC1-4 or RC1-2 varied from 97.7 to 99.5% with 38 to 45% grades. After the regrinding and cleanings, about 89 to 95% of carbon grades were achieved with 56 to 97% recoveries. The highest grade, 95.2% graphite concentrate, with moderate 56% recovery was produced in Test 4, when the regrinding fineness was D80~83 µm. Higher collector dosages should probably have been used in Test 4 cleanings, because graphite was depressed heavily in the 3rd cleaning.

The magnetic separation prior to the rougher flotation in Tests 3 & 4 slightly decreased the carbon recoveries in comparison to Test 1. About 0.7 to 1.8% of carbon was lost into magnetic products. Major part of the iron sulphides (pyrrhotite) could be removed by magnetic separation: about 74 to 77% of iron was recovered into magnetic concentrates. Additionally, when magnetic separation was utilized, the sulfur content in the flotation tailings decreased to 0.7–0.8%, as opposed to Test 2, where it was as high as 5.3%.

Table 4. Cleaner flotation test results, sample XA3-AE.

Test	Sample	Product	Mass		C (Leco)		SiO2 (XRF)		Al2O3 (XRF)		MgO (XRF)		Fe (XRF)		S (Leco)	
			g	%	%	Rec%	%	Rec%	%	Rec%	%	Rec%	%	Rec%	%	Rec%
2	XA3-AE	RC1-4	131.1	13.1	38.3	99.5	36.2	8.2	9.7	10.7	2.4	9.3	3.8	6.3	1.6	4.4
		CC1	67.4	6.7	74.2	99.2	13.3	1.5	4.3	2.4	1.4	2.7	1.4	1.2	0.5	0.7
		CC2	59.5	5.9	83.8	98.9	7.3	0.8	2.7	1.3	1.0	1.8	0.9	0.6	0.3	0.4
		CC3	55.3	5.5	88.6	97.2	5.2	0.5	2.0	0.9	0.9	1.4	0.7	0.5	0.2	0.3
		Tails	869.7	86.9	0.0	0.5	61.3	91.8	12.3	89.3	3.5	90.7	8.6	93.7	5.3	95.6
		Calc. feed	1000.8	100.0	5.0	100.0	58.0	100.0	12.0	100.0	3.4	100.0	8.0	100.0	4.8	100.0
3	XA3-AE	M1-M2	129.0	13.0	0.7	1.8	14.0	3.1	3.2	3.5	0.7	2.8	45.2	77.1	31.7	87.0
		RC1-4	119.6	12.0	40.9	97.7	36.5	7.5	10.0	9.9	2.4	8.6	2.6	4.1	0.7	1.7
		CC1	61.6	6.2	79.1	97.4	12.0	1.3	3.7	1.9	1.1	2.1	1.2	0.9	0.4	0.5
		CC2	53.2	5.3	91.2	96.9	4.5	0.4	1.7	0.7	0.7	1.1	0.6	0.4	0.3	0.3
		CC3	49.4	5.0	94.3	93.2	3.2	0.3	1.3	0.5	0.6	0.9	0.5	0.3	0.3	0.3
		Tails	745.4	75.0	0.0	0.5	70.1	89.4	14.0	86.7	4.0	88.6	1.9	18.8	0.7	11.2
		Calc. feed	994.0	100.0	5.0	100.0	58.8	100.0	12.1	100.0	3.4	100.0	7.6	100.0	4.7	100.0
4	XA3-AE	M1	112.0	11.2	0.3	0.7	6.1	1.2	1.8	1.6	0.4	1.3	51.6	74.3	36.1	86.2
		RC1-2	103.1	10.3	44.9	98.7	31.5	5.5	8.9	7.5	2.2	6.7	4.3	5.7	0.6	1.3
		CC1	48.1	4.8	85.1	87.4	7.3	0.6	2.1	0.8	0.5	0.7	1.5	0.9	0.3	0.3
		CC2	42.6	4.3	94.0	85.5	2.4	0.2	0.7	0.3	0.2	0.3	0.6	0.4	0.2	0.2
		CC3	27.7	2.8	95.2	56.3	1.6	0.1	0.6	0.1	0.2	0.1	0.5	0.2	0.2	0.1
		Tails	782.8	78.4	0.0	0.6	69.7	93.3	14.2	90.8	3.9	92.0	2.0	19.9	0.8	12.5
		Calc. feed	997.9	100.0	4.7	100.0	58.6	100.0	12.3	100.0	3.3	100.0	7.8	100.0	4.7	100.0

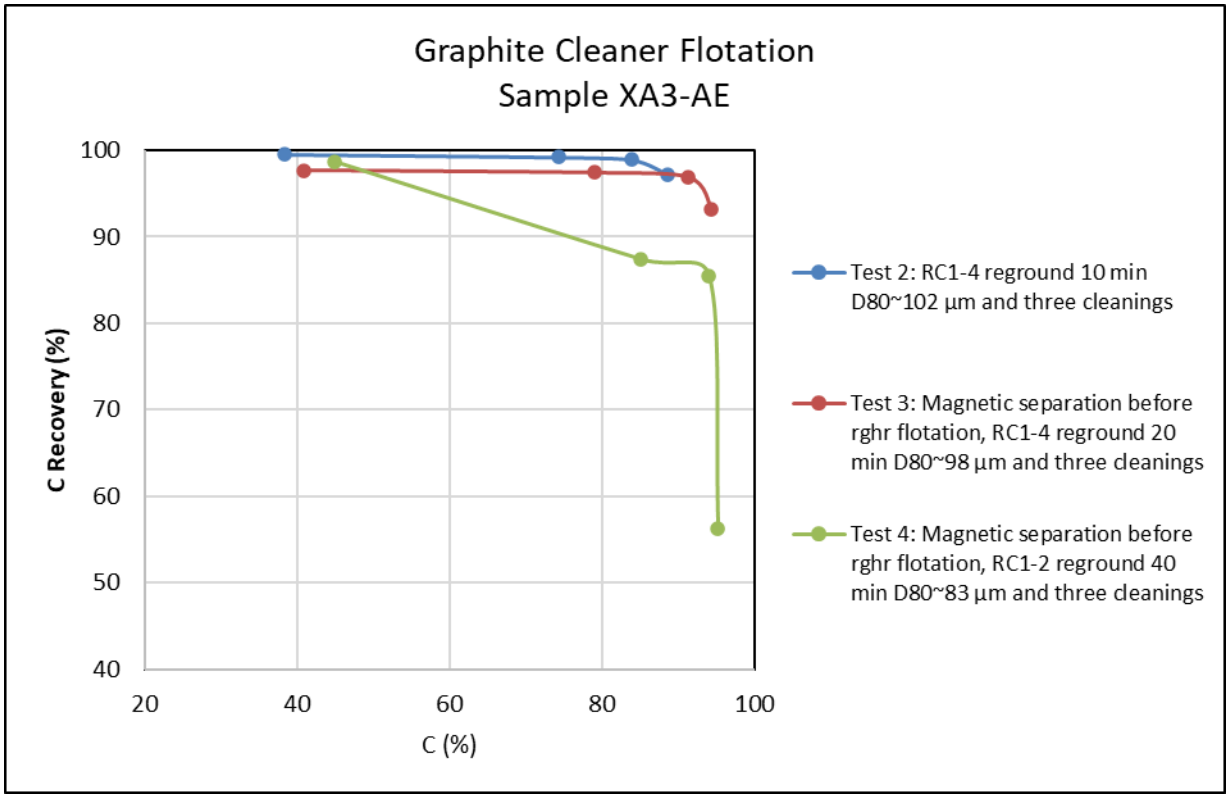

Figure 20. Cleaner flotation tests, carbon grades and recoveries, sample XA3-AE.

Sample YA4-AE

The carbon recoveries in the rougher concentrates RC1-4 or RC1-2 were 95 to 97% with 38 to 45% grades. The best graphite concentrate was produced in Test 4, when 40 minutes regrinding was applied for the rougher graphite concentrate followed by three cleanings. The carbon grade in the 3rd cleaner concentrate was 96.3% with 64% recovery. The carbon grade was already very high after the 2nd cleaning: 95% grade with 91% recovery.

In Tests 3 & 4 about 52 to 54% of total iron was recovered into magnetic products and 0.4 to 1.1% of carbon was lost. The sulphur content in the flotation tailings was 3.7% without magnetic separation (Test 2) and 1.4%, when magnetic separation was applied.

Table 5. Cleaner flotation test results, sample YA4-AE.

Test	Sample	Product	Mass		C (Leco)		SiO2 (XRF)		Al2O3 (XRF)		MgO (XRF)		Fe (XRF)		S (Leco)	
			g	%	%	Rec%	%	Rec%	%	Rec%	%	Rec%	%	Rec%	%	Rec%
2	YA4-AE	RC1-4	96.0	9.6	29.4	96.5	40.8	6.4	11.2	8.2	3.0	8.4	5.0	7.3	1.8	4.9
		CC1	41.3	4.1	67.8	95.8	15.4	1.0	5.4	1.7	2.0	2.4	2.6	1.7	0.7	0.8
		CC2	35.1	3.5	79.3	95.4	8.2	0.5	3.5	0.9	1.6	1.6	1.8	1.0	0.4	0.4
		CC3	30.6	3.1	86.3	90.6	5.8	0.3	2.6	0.6	1.3	1.2	1.6	0.7	0.3	0.3
		Tails	904.2	90.4	0.1	3.5	63.4	93.6	13.3	91.8	3.5	91.6	6.7	92.7	3.7	95.1
		Calc. feed	1000.1	100.0	2.9	100.0	61.2	100.0	13.1	100.0	3.4	100.0	6.6	100.0	3.5	100.0
3	YA4-AE	M1-M2	70.0	7.1	0.5	1.1	10.7	1.2	2.7	1.5	0.7	1.4	48.1	54.0	23.8	55.6
		RC1-4	99.8	10.1	27.1	96.6	43.2	7.1	11.8	9.1	3.0	8.8	4.5	7.2	1.5	4.9
		CC1	37.4	3.8	71.8	95.9	13.8	0.8	4.7	1.3	1.6	1.8	2.3	1.4	0.6	0.7
		CC2	31.7	3.2	84.4	95.4	6.0	0.3	2.6	0.6	1.2	1.1	1.5	0.8	0.3	0.4
		CC3	27.7	2.8	88.7	87.6	4.4	0.2	2.1	0.4	1.0	0.8	1.3	0.6	0.3	0.3
		Tails	821.0	82.9	0.1	2.3	68.3	91.7	14.2	89.5	3.8	89.8	2.9	38.8	1.4	39.5
		Calc. feed	990.8	100.0	2.8	100.0	61.7	100.0	13.1	100.0	3.5	100.0	6.3	100.0	3.0	100.0
4	YA4-AE	M1	64.7	6.5	0.2	0.4	6.4	0.7	1.9	0.9	0.4	0.8	51.7	52.2	35.0	63.5
		RC1-2	75.2	7.5	35.9	95.3	35.6	4.3	10.3	5.9	2.8	6.3	6.3	7.4	1.3	2.7
		CC1	32.0	3.2	82.8	93.4	9.1	0.5	2.8	0.7	0.8	0.7	2.0	1.0	0.5	0.4
		CC2	27.2	2.7	95.0	91.3	2.4	0.1	0.9	0.2	0.4	0.3	0.7	0.3	0.2	0.2
		CC3	19.0	1.9	96.3	64.5	1.8	0.1	0.7	0.1	0.3	0.2	0.6	0.2	0.2	0.1
		Tails	858.9	86.0	0.1	4.3	68.2	95.0	14.3	93.2	3.6	92.9	3.0	40.4	1.4	33.7
		Calc. feed	998.8	100.0	2.8	100.0	61.7	100.0	13.2	100.0	3.4	100.0	6.4	100.0	3.6	100.0

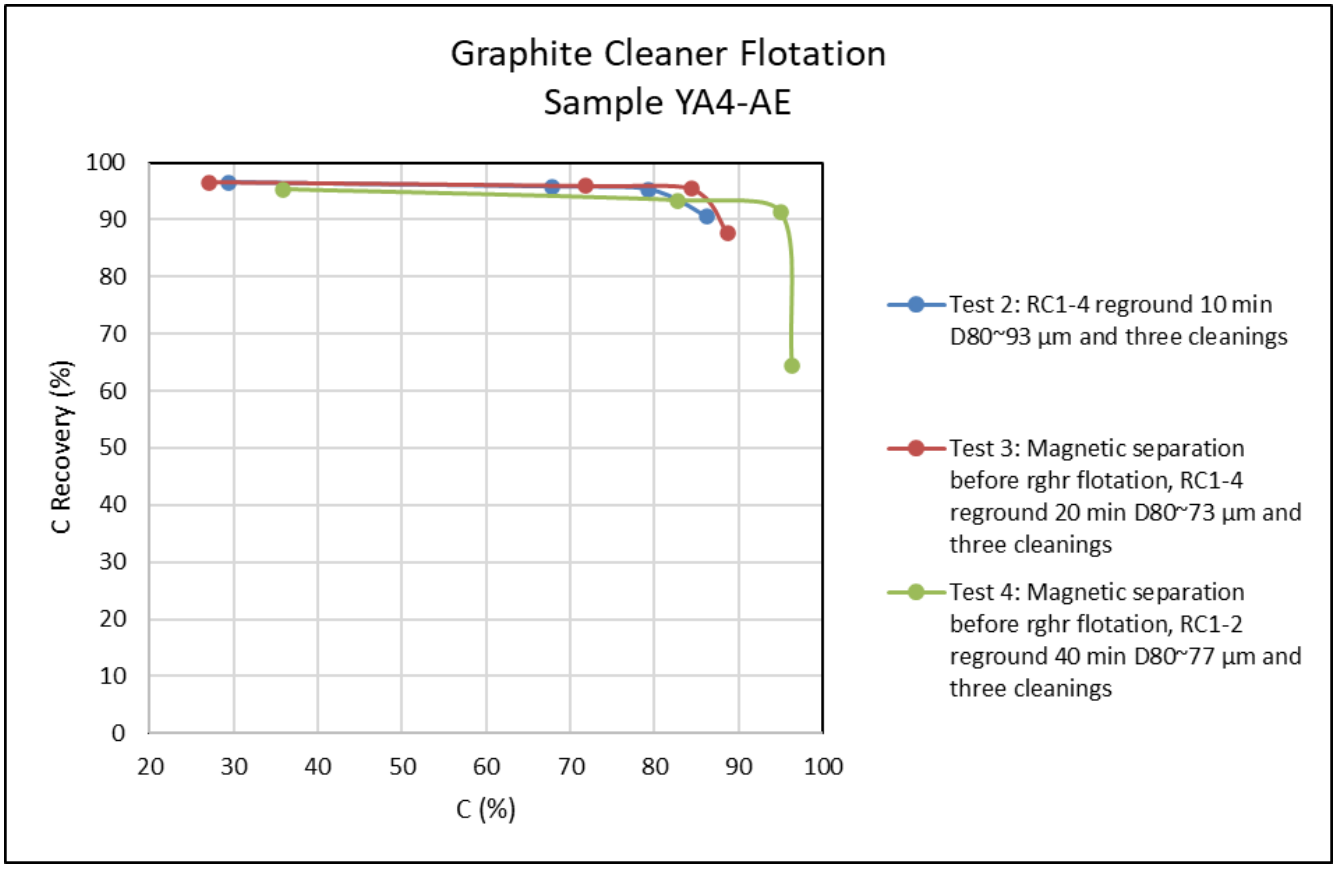

Figure 21. Cleaner flotation tests, carbon grades and recoveries, sample YA4-AE.
**There could be a mistake in the regrinding fineness in Tests 3&4.*

Sample QA2-AE

In general, the carbon recoveries in the rougher concentrates were high, 98.5 to 99.7%, with 35 to 40% grades. Overall, the best grade recovery curve was produced in Test 3, when the rougher concentrate was reground 20 minutes and cleaned three times. The carbon grade in 3rd concentrate was 87% with 93% recovery.

The carbon grade in the final concentrate was higher, 90%, in Test 4, when 40 minutes regrinding was applied. Thus, graphite was depressed rather much in the 3rd cleaning. In Tests 5 & 6, about 91–93% carbon grades were achieved, when 60 minutes regrinding was applied, but recoveries were poor, 7 to 29%. When the D80~39 µm regrinding was applied in Tests 5 & 6, graphite depressed heavily in the cleanings and most likely more collectors would have been required.

Table 6. Cleaner flotation test results, sample QA2-AE.

Test	Sample	Product	Mass		C (Leco)		SiO2 (XRF)		Al2O3 (XRF)		MgO (XRF)		Fe (XRF)		S (Leco)	
			g	%	%	Rec%	%	Rec%	%	Rec%	%	Rec%	%	Rec%	%	Rec%
2	QA2-AE	RC1-4	166.7	16.7	36.4	99.2	33.5	10.2	10.0	13.3	3.5	12.8	4.9	10.7	2.5	9.5
		CC1	87.9	8.8	68.8	98.7	13.7	2.2	4.9	3.5	2.1	3.9	2.3	2.6	1.1	2.2
		CC2	76.2	7.6	78.9	98.2	7.7	1.1	3.2	1.9	1.5	2.4	1.5	1.5	0.7	1.3
		CC3	72.0	7.2	82.5	97.1	6.2	0.8	2.6	1.5	1.3	2.0	1.3	1.2	0.6	1.1
		Tails	831.8	83.3	0.1	0.8	59.4	89.8	13.0	86.7	4.9	87.2	8.2	89.3	4.7	90.5
		Calc. feed	998.5	100.0	6.1	100.0	55.1	100.0	12.5	100.0	4.6	100.0	7.6	100.0	4.4	100.0
3	QA2-AE	M1-M2	80.0	8.1	0.3	0.5	5.7	0.8	1.7	1.1	0.5	0.8	51.8	56.5	35.6	63.4
		RC1-4	170.0	17.1	35.4	98.8	35.9	11.2	10.6	14.2	3.7	13.5	4.2	9.7	1.8	6.8
		CC1	82.6	8.3	72.7	98.5	13.0	2.0	4.5	3.0	1.8	3.2	2.1	2.3	0.8	1.5
		CC2	71.8	7.2	83.3	98.2	6.7	0.9	2.7	1.5	1.3	1.9	1.3	1.3	0.5	0.9
		CC3	65.1	6.6	87.4	93.4	4.6	0.5	2.0	1.0	0.9	1.3	1.0	0.9	0.4	0.6
		Tails	743.1	74.8	0.1	0.7	64.3	87.9	14.4	84.7	5.4	85.6	3.3	33.9	1.8	29.8
		Calc. feed	993.1	100.0	6.1	100.0	54.7	100.0	12.7	100.0	4.7	100.0	7.4	100.0	4.5	100.0
4	QA2-AE	M1	78.5	7.9	0.3	0.4	5.7	0.8	1.8	1.1	0.5	0.9	51.7	54.8	35.7	63.0
		RC1-2	145.2	14.6	40.1	98.5	31.8	8.3	9.8	11.1	3.4	10.7	4.8	9.4	1.7	5.5
		CC1	76.7	7.7	73.1	94.8	12.7	1.8	4.0	2.4	1.3	2.2	2.4	2.5	0.8	1.4
		CC2	63.1	6.3	85.9	91.7	5.2	0.6	1.7	0.9	0.6	0.8	1.4	1.2	0.4	0.6
		CC3	44.2	4.4	90.1	67.3	3.1	0.2	1.1	0.4	0.4	0.4	1.0	0.6	0.3	0.3
		Tails	770.9	77.5	0.1	1.1	65.2	90.8	14.5	87.8	5.3	88.5	3.4	35.7	1.8	31.5
		Calc. feed	994.7	100.0	5.9	100.0	55.6	100.0	12.8	100.0	4.6	100.0	7.4	100.0	4.5	100.0
5	QA2-AE	M1	78.9	7.9	0.2	0.3	6.5	0.9	1.9	1.2	0.6	1.4	53.4	55.7	35.7	63.0
		RC1-2	152.8	15.3	38.9	99.7	32.3	8.9	9.4	11.5	2.6	11.8	5.9	12.0	1.6	5.4
		CC1	58.2	5.8	55.8	54.4	23.0	2.4	6.7	3.1	1.8	3.1	4.7	3.6	1.2	1.6
		CC2	34.5	3.5	77.2	44.7	11.1	0.7	3.3	0.9	0.9	0.9	3.1	1.4	0.7	0.5
		CC3	20.6	2.1	87.4	30.2	5.5	0.2	1.7	0.3	0.5	0.3	2.2	0.6	0.5	0.2
		CC4	19.0	1.9	91.2	29.0	3.5	0.1	1.1	0.2	0.3	0.2	1.7	0.4	0.4	0.2
		Tails	767.1	76.8	0.0	0.0	65.5	90.2	14.2	87.3	3.7	86.8	3.2	32.3	1.8	31.6
		Calc Feed	998.8	100.0	6.0	100.0	55.8	100.0	12.5	100.0	3.3	100.0	7.6	100.0	4.5	100.0
6	QA2-AE	M1	74.8	7.5	0.3	0.3	7.0	0.9	2.1	1.3	0.8	1.8	51.4	52.5	36.0	60.6
		RC1-2	151.0	15.1	38.6	99.0	32.9	8.9	9.6	11.7	2.4	10.6	5.9	12.2	1.7	5.9
		CC1	81.4	8.2	57.4	79.3	22.4	3.3	6.4	4.2	1.6	3.8	4.6	5.1	1.3	2.3
		CC2	55.5	5.6	75.0	70.7	12.4	1.2	3.5	1.6	0.9	1.5	3.4	2.6	0.8	1.0
		CC3	36.4	3.6	83.7	51.7	7.4	0.5	2.2	0.6	0.6	0.6	2.8	1.4	0.6	0.5
		CC4	16.9	1.7	90.1	25.9	4.2	0.1	1.3	0.2	0.4	0.2	1.8	0.4	0.5	0.2
		CC5	4.5	0.5	93.1	7.1	2.7	0.0	0.9	0.0	0.3	0.0	1.3	0.1	0.4	0.0
		Tails	772.3	77.4	0.1	0.7	65.1	90.1	13.9	87.0	3.9	87.6	3.3	35.3	1.9	33.5
		Calc Feed	998.1	100.0	5.9	100.0	55.8	100.0	12.4	100.0	3.4	100.0	7.3	100.0	4.5	100.0

Only about 0.3 to 0.5% of carbon was lost and 53 to 56% of total iron was recovered into magnetic products. The sulphur content in flotation tailings was 4.7% without magnetic separation (Test 2) and 1.8 to 1.9%, when magnetic separation was applied.

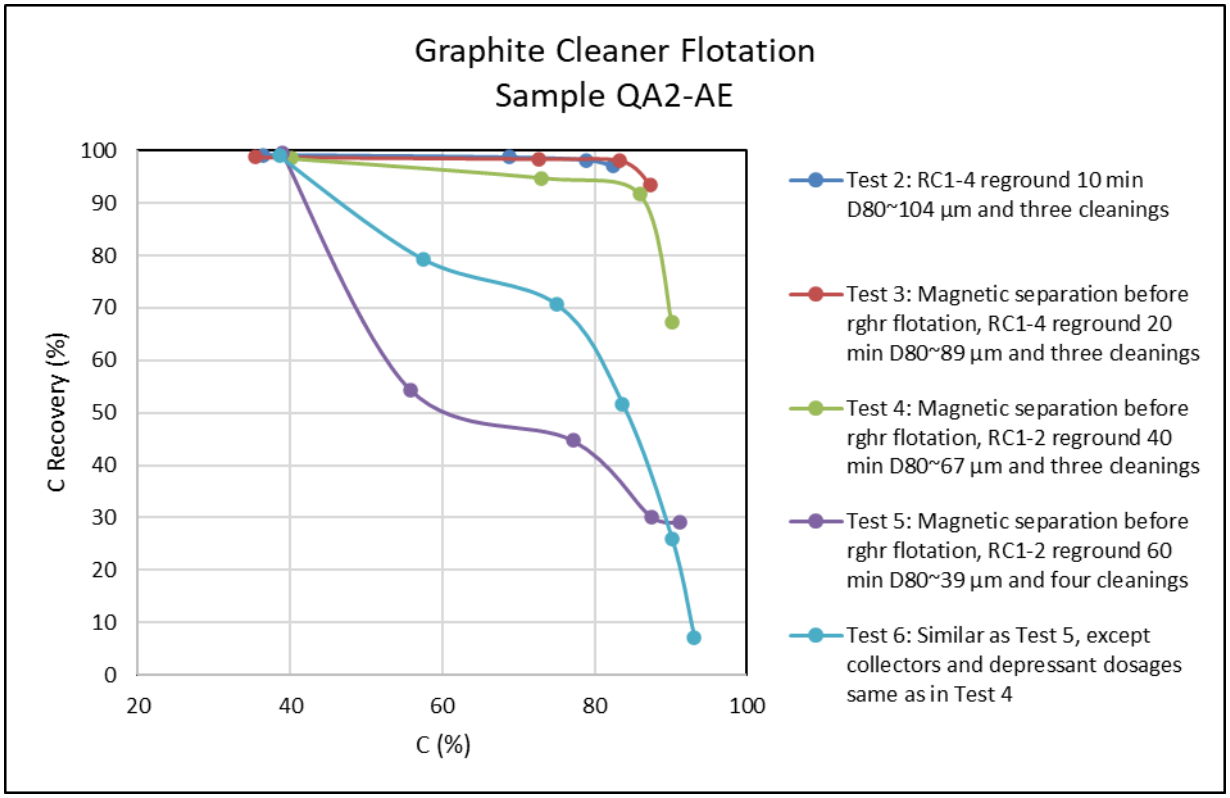

Figure 22. Cleaner flotation tests, carbon grades and recoveries, sample QA2-AE.

Sample PA1-AE

The carbon recoveries in the rougher concentrates were 94.9 to 98.9% with 34 to 41% grades. Regarding the grade and recovery, the best results were achieved in Test 3, when the rougher concentrate was reground 20 minutes and cleaned three times. The carbon grade in the 3rd cleaner concentrate was 83.5% with 90.8% recovery. The carbon grade in the final concentrate was higher. In Test 4, the carbon grade was 3 %-units higher, thus the recovery was 20 %-units lower. Graphite was depressed in the 3rd cleaning.

In Tests 5 & 6, the carbon grades in the final concentrates were about 83 to 89%, when 60 minutes regrinding was applied, but recoveries were low: 22 to 42%. The graphite depressed heavily in the cleanings; more collectors would have been needed.

Roughly 1 to 4% of carbon was lost and about 68 to 71% of total iron was recovered into magnetic products. The sulphur content in flotation tailings was about 7% (Test 2) without magnetic separation and 1.6 to 1.7%, when magnetic separation was applied.

Table 7. Cleaner flotation test results, sample PA1-AE.

Test	Sample	Product	Mass		C (Leco)		SiO2 (XRF)		Al2O3 (XRF)		MgO (XRF)		Fe (XRF)		S (Leco)	
			g	%	%	Rec%	%	Rec%	%	Rec%	%	Rec%	%	Rec%	%	Rec%
2	PA1-AE	RC1-4	210.6	21.1	34.3	98.9	33.1	13.8	10.5	19.2	4.1	16.3	4.2	9.4	2.0	7.4
		CC1	120.8	12.1	59.3	98.2	17.1	4.1	6.4	6.7	2.8	6.5	2.2	2.7	0.8	1.7
		CC2	106.0	10.6	67.3	97.7	12.2	2.6	4.9	4.5	2.3	4.7	1.6	1.8	0.6	1.0
		CC3	95.7	9.6	72.9	95.6	8.7	1.7	3.6	3.0	1.9	3.4	1.3	1.3	0.5	0.8
		Tails	789.1	78.9	0.1	1.1	55.1	86.2	11.8	80.8	5.5	83.7	10.9	90.6	6.7	92.6
		Calc. feed	999.7	100.0	7.3	100.0	50.5	100.0	11.5	100.0	5.2	100.0	9.5	100.0	5.7	100.0
3	PA1-AE	M1-M2	141.3	14.2	0.8	1.4	11.9	3.3	3.2	3.9	1.2	3.2	46.0	70.7	32.3	77.8
		RC1-4	212.7	21.4	34.9	97.6	35.4	14.9	11.1	20.3	4.2	16.8	3.3	7.6	1.3	4.6
		CC1	106.9	10.7	69.0	96.9	14.2	3.0	5.2	4.8	2.3	4.8	1.8	2.1	0.6	1.0
		CC2	93.7	9.4	78.3	96.4	8.7	1.6	3.6	2.9	1.8	3.2	1.3	1.3	0.4	0.6
		CC3	82.7	8.3	83.5	90.8	6.1	1.0	2.6	1.8	1.4	2.1	1.0	0.9	0.3	0.4
		Tails	640.5	64.4	0.1	0.9	64.5	81.8	13.8	75.9	6.6	80.0	3.1	21.7	1.6	17.7
		Calc. feed	994.6	100.0	7.7	100.0	50.8	100.0	11.7	100.0	5.3	100.0	9.2	100.0	5.9	100.0
4	PA1-AE	M1	128.4	12.9	0.5	0.9	7.7	1.9	2.4	2.6	0.8	1.9	49.6	68.9	34.4	76.4
		RC1-2	192.6	19.3	38.1	97.9	34.1	12.9	11.0	17.9	4.0	14.6	3.9	8.0	1.1	3.5
		CC1	100.0	10.0	69.6	92.8	14.3	2.8	4.8	4.1	1.9	3.6	2.2	2.4	0.6	1.0
		CC2	82.9	8.3	81.8	90.5	7.0	1.1	2.6	1.8	1.1	1.8	1.5	1.3	0.4	0.5
		CC3	61.0	6.1	86.8	70.6	4.5	0.5	1.8	0.9	0.8	1.0	1.2	0.8	0.3	0.3
		Tails	675.3	67.8	0.1	1.2	64.3	85.2	14.0	79.5	6.4	83.4	3.2	23.1	1.7	20.1
		Calc. feed	996.3	100.0	7.5	100.0	51.2	100.0	11.9	100.0	5.2	100.0	9.3	100.0	5.8	100.0
5	PA1-AE	M1	128.6	12.9	0.5	0.9	9.1	2.3	2.9	3.1	1.0	3.5	48.9	68.1	34.8	76.3
		RC1-2	197.3	19.7	37.3	98.2	33.8	12.9	10.3	17.2	2.8	14.6	4.8	10.2	1.1	3.7
		CC1	119.7	12.0	47.0	75.0	28.2	6.5	8.7	8.8	2.4	7.5	4.4	5.6	1.0	2.0
		CC2	73.6	7.4	63.0	61.8	18.9	2.7	5.9	3.7	1.7	3.3	3.7	2.9	0.8	0.9
		CC3	46.6	4.7	75.6	47.0	11.5	1.0	3.8	1.5	1.2	1.4	3.1	1.5	0.6	0.5
		CC4	37.8	3.8	83.3	42.1	7.2	0.5	2.5	0.8	0.8	0.8	2.6	1.1	0.5	0.3
		Tails	674.6	67.4	0.1	0.9	64.8	84.8	14.0	79.6	4.6	81.9	3.0	21.7	1.7	20.0
		Calc Feed	1000.4	100.0	7.5	100.0	51.6	100.0	11.8	100.0	3.8	100.0	9.2	100.0	5.9	100.0
6	PA1-AE	M1	163.3	16.4	1.7	3.6	23.1	7.3	5.3	7.5	1.8	7.1	37.1	69.2	26.6	77.1
		RC1-2	177.2	17.8	40.6	94.9	32.3	11.0	9.9	15.2	2.6	11.5	4.5	9.2	1.1	3.4
		CC1	109.6	11.0	54.7	79.1	24.1	5.1	7.4	7.0	2.0	5.5	3.9	4.8	0.9	1.7
		CC2	71.6	7.2	71.9	68.0	14.1	2.0	4.5	2.8	1.3	2.3	3.0	2.4	0.6	0.8
		CC3	53.1	5.3	79.4	55.6	9.8	1.0	3.2	1.5	1.0	1.3	2.5	1.5	0.5	0.5
		CC4	32.0	3.2	86.1	36.4	6.1	0.4	2.1	0.6	0.7	0.5	2.1	0.8	0.4	0.2
		CC5	18.6	1.9	88.7	21.8	4.8	0.2	1.7	0.3	0.6	0.3	1.8	0.4	0.4	0.1
		Tails	656.0	65.8	0.2	1.5	64.5	81.7	13.6	77.3	5.0	81.4	2.9	21.6	1.7	19.5
		Calc Feed	996.4	100.0	7.6	100.0	52.0	100.0	11.6	100.0	4.1	100.0	8.8	100.0	5.6	100.0

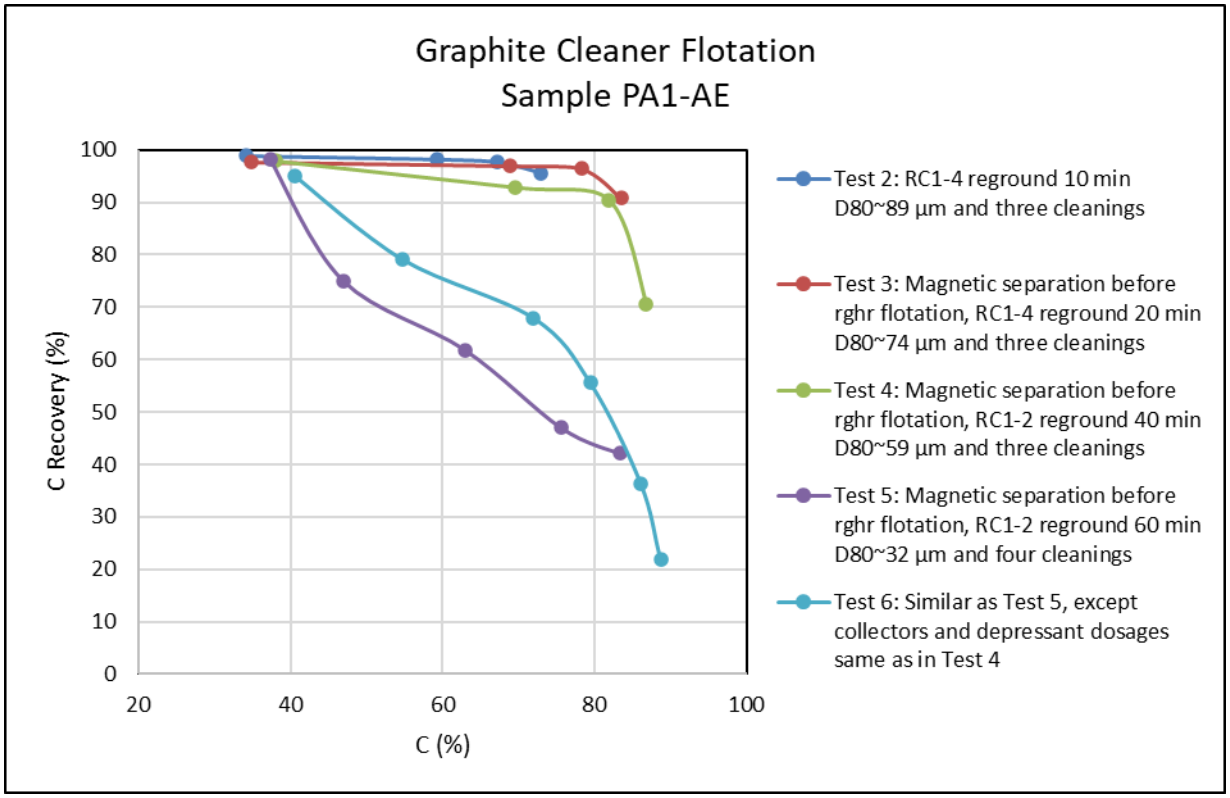

Figure 23. Cleaner flotation tests, carbon grades and recoveries, sample PA1-AE.

Sample ZA5-AE

The carbon recoveries in the rougher concentrates were 98.3 to 99.5 % with 38 to 44% grades. The best graphite concentrate was produced in Test 4, when the rougher concentrate was reground 40 minutes (D80~69 µm) and cleaned three times. The carbon grade in the final concentrate was 90.9% and recovery 81%.

The finer regrinding was applied in Tests 5 & 6 (D80~40 µm). The purpose was to improve the liberation of graphite, however, the quality of graphite concentrates was not improved. The carbon grades in the final concentrates were about 87 to 89% with 33 to 58% recovery.

About 0.4 to 1.2% of carbon was lost and about 74 to 78% of total iron was recovered into magnetic products. The sulphur content in flotation tailings was about 6% (Test 2) without magnetic separation and 0.8 to 1.0%, when magnetic separation was applied.

Table 8. Cleaner flotation test results, sample ZA5-AE.

Test	Sample	Product	Mass		C (Leco)		SiO2 (XRF)		Al2O3 (XRF)		MgO (XRF)		Fe (XRF)		S (Leco)	
			g	%	%	Rec%	%	Rec%	%	Rec%	%	Rec%	%	Rec%	%	Rec%
2	ZA5-AE	RC1-4	177.8	17.8	39.0	99.5	32.0	10.8	10.1	14.6	3.5	12.5	3.8	8.2	1.9	6.6
		CC1	99.4	9.9	69.4	99.1	13.9	2.6	5.0	4.1	2.0	3.9	1.6	1.9	0.8	1.5
		CC2	88.1	8.8	78.0	98.7	8.8	1.5	3.5	2.5	1.5	2.6	1.1	1.1	0.6	1.0
		CC3	81.9	8.2	82.6	97.2	6.2	1.0	2.5	1.7	1.2	1.9	0.9	0.8	0.5	0.8
		Tails	822.7	82.2	0.0	0.5	57.0	89.2	12.7	85.4	5.4	87.5	9.3	91.8	5.9	93.4
		Calc. feed	1000.5	100.0	7.0	100.0	52.6	100.0	12.2	100.0	5.0	100.0	8.3	100.0	5.2	100.0
3	ZA5-AE	M1-M2	125.8	12.6	0.4	0.8	7.6	1.8	2.4	2.4	0.8	2.1	49.7	77.6	34.7	86.2
		RC1-4	180.8	18.1	38.0	98.8	34.6	11.8	10.6	15.4	3.7	13.3	2.7	6.1	1.0	3.6
		CC1	90.6	9.1	75.4	98.2	11.6	2.0	4.0	2.9	1.5	2.7	1.3	1.4	0.5	0.8
		CC2	80.2	8.1	84.7	97.8	6.0	0.9	2.3	1.5	1.0	1.6	0.8	0.8	0.3	0.5
		CC3	74.0	7.4	88.5	94.2	4.4	0.6	1.8	1.1	0.8	1.2	0.6	0.6	0.3	0.4
		Tails	689.3	69.2	0.0	0.4	66.2	86.4	14.8	82.2	6.2	84.6	1.9	16.3	0.8	10.2
		Calc. feed	995.9	100.0	7.0	100.0	53.1	100.0	12.5	100.0	5.1	100.0	8.1	100.0	5.1	100.0
4	ZA5-AE	M1	121.9	12.2	0.4	0.6	5.8	1.3	2.0	2.0	0.7	1.7	51.1	75.7	36.1	85.5
		RC1-2	156.8	15.7	43.3	98.6	30.6	9.1	9.6	12.3	3.2	10.0	3.4	6.4	0.9	2.7
		CC1	88.2	8.8	75.2	96.4	11.7	2.0	3.8	2.7	1.2	2.1	1.8	1.9	0.5	0.8
		CC2	75.4	7.6	86.5	94.8	5.0	0.7	1.7	1.0	0.6	0.9	1.1	1.0	0.3	0.5
		CC3	61.3	6.1	90.9	81.0	2.9	0.3	1.0	0.5	0.4	0.5	0.8	0.6	0.3	0.3
		Tails	718.8	72.1	0.1	0.7	65.9	89.6	14.7	85.7	6.2	88.2	2.1	17.9	0.8	11.8
		Calc. feed	997.4	100.0	6.9	100.0	53.0	100.0	12.4	100.0	5.1	100.0	8.2	100.0	5.2	100.0
5	ZA5-AE	M1	121.6	12.1	0.2	0.4	7.4	1.7	2.5	2.4	0.9	3.0	51.5	75.1	34.9	86.0
		RC1-2	162.8	16.3	41.9	99.5	32.0	9.7	9.7	12.7	2.4	10.8	4.2	8.1	0.8	2.8
		CC1	101.1	10.1	54.3	80.1	24.8	4.7	7.6	6.2	1.9	5.1	3.6	4.4	0.7	1.5
		CC2	67.2	6.7	71.2	70.0	15.0	1.9	4.5	2.5	1.1	2.1	2.8	2.3	0.5	0.7
		CC3	49.7	5.0	83.0	60.3	8.2	0.8	2.5	1.0	0.7	0.9	2.2	1.3	0.4	0.4
		CC4	44.5	4.4	88.9	57.8	4.8	0.4	1.5	0.6	0.4	0.5	1.8	1.0	0.3	0.3
		Tails	717.1	71.6	0.0	0.1	66.5	88.6	14.7	84.9	4.4	86.2	1.9	16.8	0.8	11.2
		Calc Feed	1001.4	100.0	6.8	100.0	53.7	100.0	12.4	100.0	3.7	100.0	8.3	100.0	4.9	100.0
6	ZA5-AE	M1	127.6	12.8	0.6	1.2	10.7	2.6	3.2	3.3	1.2	3.7	47.7	73.7	33.6	84.1
		RC1-2	150.7	15.1	43.9	98.3	30.6	8.6	9.4	11.6	2.3	8.8	4.4	8.0	0.8	2.4
		CC1	94.7	9.5	58.5	82.3	22.2	3.9	6.7	5.2	1.6	4.0	3.7	4.2	0.6	1.2
		CC2	67.8	6.8	69.3	69.7	15.9	2.0	4.9	2.7	1.2	2.1	3.2	2.6	0.5	0.7
		CC3	54.5	5.4	77.1	62.3	11.4	1.2	3.5	1.6	0.9	1.2	2.8	1.8	0.4	0.5
		CC4	40.9	4.1	82.4	50.1	8.3	0.6	2.6	0.9	0.7	0.7	2.5	1.2	0.4	0.3
		CC5	25.5	2.5	86.5	32.7	6.0	0.3	1.9	0.4	0.5	0.3	2.2	0.7	0.3	0.2
		Tails	722.1	72.2	0.1	0.5	65.6	88.8	14.4	85.1	4.7	87.4	2.1	18.3	1.0	13.5
		Calc Feed	1000.4	100.0	6.7	100.0	53.3	100.0	12.2	100.0	3.9	100.0	8.3	100.0	5.1	100.0

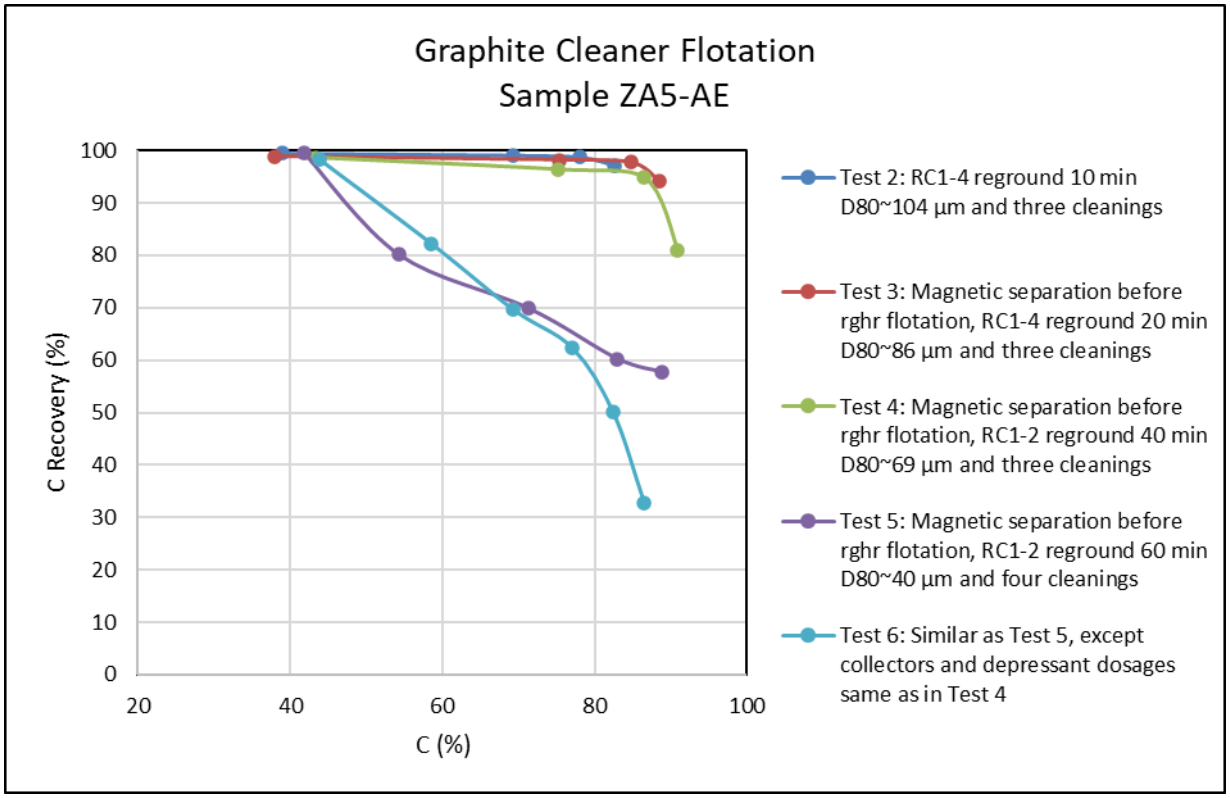

Figure 24. Cleaner flotation tests, carbon grades and recoveries, sample ZA5-AE.

7. CONCLUSIONS

Preliminary graphite flotation tests were performed with five ore samples from the Aitolampi deposit. The main variables in the flotation tests were grinding fineness and flotation chemical dosages. Additionally, the effect of magnetic separation was also studied.

The flotation kinetic of graphite was very fast. After 3 minutes of flotation, the carbon recoveries were already over 95% except with the ore sample QA2-AE it was about 77%. In general, the rougher flotation worked very well and high recoveries were achieved.

Overall, the best results were achieved with samples XA3-AE and YA4-AE. High grade (94 to 96%) graphite concentrates were produced with both samples and the corresponding recoveries were 56 to 93%. With other feed samples, the carbon grades were clearly lower in the final concentrates.

The regrinding of the rougher concentrate improved the quality of the final graphite concentrates. However, when the fine 30–40 µm regrinding was applied, graphite depressed heavily in the cleanings. Due to finer particle size and increased surface area, higher collector dosages should have been used. When the magnetic separation was applied, major part of iron (pyrrhotite) was removed with rather low (0.3 to 4%) graphite losses and the sulphur contents in the flotation tailings were lower.

Table 9. Some selected cleaner flotation concentrates.

Sample	Test	Product	Mass	C (Leco)		SiO2 (XRF)		Al2O3 (XRF)		MgO (XRF)		Fe (XRF)		S (Leco)	
			%	%	Rec%	%	Rec%	%	Rec%	%	Rec%	%	Rec%	%	Rec%
XA3-AE	3	CC3	5.0	94.3	93.2	3.2	0.3	1.3	0.5	0.6	0.9	0.5	0.3	0.3	0.3
	4	CC2	4.3	94.0	85.5	2.4	0.2	0.7	0.3	0.2	0.3	0.6	0.4	0.2	0.2
		CC3	2.8	95.2	56.3	1.6	0.1	0.6	0.1	0.2	0.1	0.5	0.2	0.2	0.1
YA4-AE	4	CC2	2.7	95.0	91.3	2.4	0.1	0.9	0.2	0.4	0.3	0.7	0.3	0.2	0.2
		CC3	1.9	96.3	64.5	1.8	0.1	0.7	0.1	0.3	0.2	0.6	0.2	0.2	0.1
QA2-AE	3	CC3	6.6	87.4	93.4	4.6	0.5	2.0	1.0	0.9	1.3	1.0	0.9	0.4	0.6
	4	CC3	4.4	90.1	67.3	3.1	0.2	1.1	0.4	0.4	0.4	1.0	0.6	0.3	0.3
PA1-AE	3	CC3	8.3	83.5	90.8	6.1	1.0	2.6	1.8	1.4	2.1	1.0	0.9	0.3	0.4
	4	CC3	6.1	86.8	70.6	4.5	0.5	1.8	0.9	0.8	1.0	1.2	0.8	0.3	0.3
ZA5-AE	3	CC3	7.4	88.5	94.2	4.4	0.6	1.8	1.1	0.8	1.2	0.6	0.6	0.3	0.4
	4	CC3	6.1	90.9	81.0	2.9	0.3	1.0	0.5	0.4	0.5	0.8	0.6	0.3	0.3

Interestingly, the best results were achieved with the lower carbon grade (2.8 to 4.9%) feed samples. Both grades and recoveries were higher in the final concentrates. Carbon recoveries with fixed 90% grade (Test 4) are shown in Figure 25. It can be noticed that with the higher feed grades the recoveries tend to be lower.

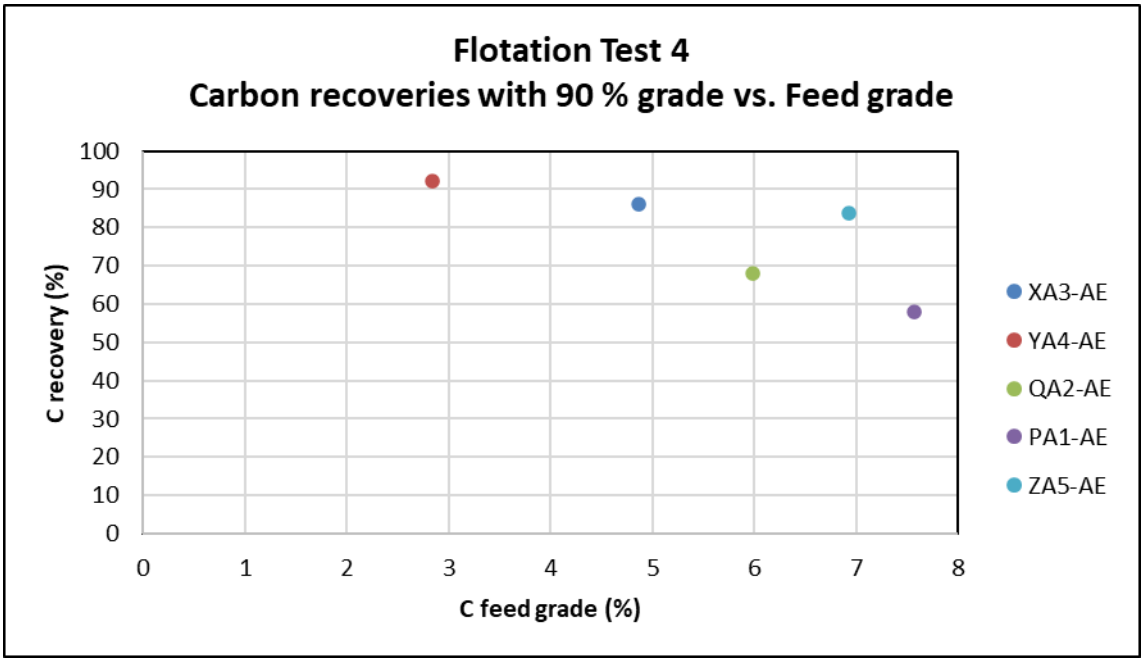

Figure 25. The carbon recoveries with fixed 90% grade vs. carbon feed grade.

In general, graphite flotation worked well, especially the rougher stage. The cleaner flotation would require further tests to optimize regrinding stage and chemical dosages in the cleanings. The rougher stage could probably be shortened, and by this way less impurities would be reported into cleanings. Additionally, the mineralogical studies of graphite concentrates could provide useful information regarding the liberations and associations of graphite.

8. REFERENCES

Beowulf Mining 2022. Aitolampi - Graphite. Retrieved March 14, 2022, from https://beowulfmining.com/projects/finland/aitolampi/#overview

Leco 2021. 844 Series Combustion Analyzer. Retrieved from https://www.leco.com/product/844-series

Michaux, S. P., Hirani, J., Nad, A., Korhonen, T., Sardisco, L., Rytkönen, S., Tepsell, J., Apeiranthitis, N., Franzel, M., Pirrie, D., Wray, D., Jolis, E., Davidson, M. and Butcher, A. R. 2023. Geometallurgical characterization of samples from Aitolampi graphite ore. Geological Survey of Finland, Open File Work Report 17/2023. 235 p. Available at: https://tupa.gtk.fi/raportti/arkisto/17_2023.pdf

Moore, D. M. & Reynolds, R. C. 1997. X-ray diffraction and identification and analysis of clay minerals. 2nd Edition, Oxford University Press, New York.

Post, J. E. & Bish, D. L. 1989. Rietveld refinement of crystal structures using powder X-ray diffraction data. Modern powder diffraction, 20, pp. 277–308.

Punkkinen, H., Karlsson, T., Juvankoski, M., Kaartinen, T., Laine-Ylijoki, J., Merta, E., . . . Wahlström, M. 2019. Sulphur Determinations. Retrieved from https://mineclosure.gtk.fi/sulphur-determinations/

X-Ray Minerals Services Ltd. 2021. X-ray Diffraction. Retrieved from https://www.xrayminerals.co.uk/fi/analytical-services/mineralogical-analysis/x-ray-diffraction/

9. APPENDIX A: CHARACTERIZATION OF AITOLAMP1 SAMPLES

Appendix A is a summary of data shown in a previous report characterizing the Aitolampi drill core samples (Michaux 2023).

9.1 Inductively coupled plasma optical emission spectroscopy (ICP-OES)

Inductively coupled plasma optical emission spectroscopy (ICP-OES) is a technique used to analyze a sample for its elemental content. This technique has a wide linear dynamic range, a high matrix tolerance, and the speed of analysis is enhanced as opposed to techniques such as inductively coupled plasma mass spectrometry (ICP-MS) or atomic absorption spectrometry (AAS).

ICP-OES involves the analysis of the optical spectra produced by samples as they pass into an excitation source or high temperature plasma. The instrument analyses samples in solution, therefore any solid samples need to be dissolved prior to analysis.

ICP-MS / OES data measured on the Aitolampi Graphite Ore and Tailings samples. This was done at the X-Ray Welshpool lab by Lithium Metaborate Fusion. ICP-OES involves the analysis of the optical spectra produced by samples as they pass into an excitation source or high temperature plasma. ICP-MS utilises a similar plasma excitation source, but instead of viewing the optical spectra, it passes the emission into a mass spectrometer for analysis. Both instruments analyse samples in solution, therefore any rock samples need to be dissolved prior to analysis.

Solid samples were first digested by alkali fusion with lithium metaborate ($LiBO_2$) flux. The flux was mixed with the 0.25 g of sample in a carbon crucible with a 5:1 ratio and heated to 1050°C using a furnace. The molten bead was then tipped into dilute nitric acid (2%) and allowed to dissolve. The chemical composition of the dissolved samples was determined by ICP-OES with a Thermo ICAP 7200 and by inductively ICP-MS with a Thermo ICAP RQ-ICP-MS.

The digested solutions were serially diluted to enter the quantification range of the instrument and calibration was achieved using matrix matched synthetic standards made from traceable single element stock standards.

Table 10. Major elements (ICP-OES/MS-XMS).

Method Sample	Al2O3 ICP-OES %	SiO2 ICP-OES %	TiO2 ICP-OES %	Fe2O3 ICP-OES %	MnO ICP-OES %	MgO ICP-OES %	CaO ICP-OES %	Na2O ICP-OES %	K2O ICP-OES %	P2O5 ICP-OES %
PA1-C	10.95	51.86	0.50	12.34	0.06	3.96	3.04	1.48	2.15	0.13
QA2-C	12.29	55.51	0.55	9.89	0.06	3.44	2.96	1.99	2.49	0.16
XA3-C	11.76	59.71	0.54	9.50	0.05	2.57	2.83	2.43	1.96	0.18
YA4-C	12.34	60.42	0.62	8.62	0.05	2.62	2.41	2.68	2.31	0.18
ZA5-C	11.93	54.24	0.54	10.25	0.06	3.79	2.98	1.81	2.35	0.13

Note: Sulphur values can be treated as semi-quantitative.

9.2 LECO Analysis

The bomb combustion method was used to analyze the total carbon (C) and total sulfur (S) present in the sample. The analysis was performed using Leco analyzer. In the analysis the sample is combusted in high temperature furnace with oxygen. The combustion oxidizes the S to sulfur di-oxide (SO_2) and C to carbon dioxide (CO_2) which quantities are measured with IR detection (Leco, 2021; Punkkinen, et al., 2019).

The LECO analysis has been also subcontracted by X-Ray Mineral Services Finland OY to Wheal Jane Services Ltd. The Sulphur and TOC analysis were measured on a LECO SC-144DRPC analyzer. 0.2 g of sample is weighed into a combustion boat, which is then inserted into the furnace. The sample is roasted at 1350°C and the sulfur and carbon are vaporized and detected by the instrument and reported as a concentration.

Table 11. LECO analysis (X-Ray Mineral Services Finland OY).

Sample	Label	%S (tot)	%C (tot)
Graphite Ore	PA1-CXD	6.47	7.96
Graphite Ore	QA2-CXD	4.60	5.96
Graphite Ore	XA3-CXD	5.22	4.99
Graphite Ore	YA4-CXD	3.83	2.85
Graphite Ore	ZA5-CXD	5.51	6.82

Inductively coupled plasma optical emission spectroscopy (ICP-OES) is a technique used to analyze a sample for its elemental content. This technique has a wide linear dynamic range, a high matrix tolerance, and the speed of analysis is enhanced as opposed to techniques such as inductively coupled plasma mass spectrometry (ICP-MS) or atomic absorption spectrometry (AAS).

ICP-OES involves the analysis of the optical spectra produced by samples as they pass into an excitation source or high temperature plasma. The instrument analyses samples in solution, therefore any solid samples need to be dissolved prior to analysis.

ICP-MS / OES data measured on the Aitolampi Graphite Ore samples. This was done at the X-Ray Welshpool lab by Lithium Metaborate Fusion. ICP-OES involves the analysis of the optical spectra produced by samples as they pass into an excitation source or high temperature plasma. ICP-MS utilises a similar plasma excitation source, but instead of viewing the optical spectra, it passes the emission into a mass spectrometer for analysis. Both instruments analyse samples in solution, therefore any rock samples need to be dissolved prior to analysis.

Solid samples were first digested by alkali fusion with lithium metaborate ($LiBO_2$) flux. The flux was mixed with the 0.25 g of sample in a carbon crucible with a 5:1 ratio and heated to 1050°C using a furnace. The molten bead was then tipped into dilute nitric acid (2%) and allowed to dissolve. The chemical composition of the dissolved samples was determined by ICP-OES with a Thermo ICAP 7200 and by inductively ICP-MS with a Thermo ICAP RQ-ICP-MS.

The digested solutions were serially diluted to enter the quantification range of the instrument and calibration was achieved using matrix matched synthetic standards made from traceable single element stock standards.

Table 12. Major elements (ICP-OES/MS-XMS).

Method Sample	Al2O3 ICP-OES %	SiO2 ICP-OES %	TiO2 ICP-OES %	Fe2O3 ICP-OES %	MnO ICP-OES %	MgO ICP-OES %	CaO ICP-OES %	Na2O ICP-OES %	K2O ICP-OES %	P2O5 ICP-OES %
PA1-C	10.95	51.86	0.50	12.34	0.06	3.96	3.04	1.48	2.15	0.13
QA2-C	12.29	55.51	0.55	9.89	0.06	3.44	2.96	1.99	2.49	0.16
XA3-C	11.76	59.71	0.54	9.50	0.05	2.57	2.83	2.43	1.96	0.18
YA4-C	12.34	60.42	0.62	8.62	0.05	2.62	2.41	2.68	2.31	0.18
ZA5-C	11.93	54.24	0.54	10.25	0.06	3.79	2.98	1.81	2.35	0.13
Pilot Tails Eastern	12.51	64.54	0.48	9.53	0.05	2.50	2.51	2.48	2.28	0.15
Pilot Tails Western	12.74	62.02	0.53	9.61	0.06	3.07	2.64	2.38	2.52	0.18

Note: Sulphur values can be treated as semi-quantitative.

9.3 QXRD Whole-rock analysis

X-Ray diffraction (XRD) is an analytical technique used for the quantitative determination of the minerals present in crystalline material such as rocks. The method depends upon the unique structural properties of the analyzed crystals and measures the intensities and scattering of the X-rays leaving the sample.

The samples were first disaggregated gently using a pestle and mortar. After quartering, three splits of 2 g for each triplicate sample and one for non-triplicate sample were micronized in water using a McCrone Micronising Mill to obtain an X-ray diffraction powder with a mean particle diameter of between 5 – 10 microns. The slurry was dried overnight at 80°C, re-crushed to a fine powder and backpacked into a steel sample holder, producing a randomly orientated sample for presentation to the X-ray beam.

Whole-rock samples were scanned on a PANalytical X'Pert3 diffractometer using a CuKα radiation at 40 kV and 40 mA. The diffractometer is equipped with Automatic Divergence Slits (10 mm irradiated area), sample spinner and PIXcel 1-D detector. Whole-rock samples were scanned from 4.5 to 75° (2θ) at a step size of 0.013 for 4 hours (or 30 minutes for non-micronized samples).

The goal of the whole-rock sample preparation is to have a random orientation of the grains, allowing unbiased phase quantification and minimizing the error caused by preferred orientation of certain minerals (e.g., mica flakes, feldspar, amphibole). The study of a randomly oriented powder will give an approximate proportion of clay minerals present in the sample.

Qualitative analysis on bulk rock samples has been carried out using two commercial software packages associated with the ICDD PDF-4 Minerals database: Traces (v.6) by GBC Scientific Equipment and HighScore Plus (v.4) by PANalytical. For this project XRD quantitative phase analysis on whole rock samples has been performed using the Rietveld method with either BGMN AutoQuan or HighScore Plus software. The Rietveld method is based upon a full-pattern analysis (rather than single peaks) where a computer model allows a theoretical diffractogram to be calculated for any phase mixture (Post & Bish, 1989).

Table 13. Whole rock XRD analysis Aitolampi drill core ore and pilot tailings.

Aitolampi Sample	Mass (g)	Biotite (%)	Muscovite (%)	Kaolinite (%)	Chlorite (%)	Quartz (%)	K Feldspar (%)
PA1-CXD	717.1	0.1	5.0		9.3	27.7	13.7
QA2-CXD	692.5	1.5	0.7		8.0	34.8	12.0
XA3-CXD	724.1	3.0	0.4		3.8	36.6	12.4
YA4-CXD	716.6	0.7	2.1		7.2	37.8	14.2
ZA5-CXD	703.8	8.7	0.0		2.9	30.2	9.9
Rougher Tails Eastern		6.8	2.3	0.2	3.1	37.7	6.1
Rougher Tails Western		6.6	1.6	0.0	11.6	37.3	4.8

Aitolampi Sample	Plagioclase (%)	Calcite (%)	Amphibole (%)	Graphite (%)	Sphalerite (%)	Pyrite (%)	Pyrrhotite (%)	Total (%)
PA1-CXD	15.5	TR	5.4	10.9	0.6	0.3	11.5	100 %
QA2-CXD	22.9	0.0	TR	11.5	0.6	2.2	5.8	100 %
XA3-CXD	24.8	0.0	0.0	10.8	0.0	TR	8.2	100 %
YA4-CXD	30.4	TR	0.0	0.0	TR	1.4	6.2	100 %
ZA5-CXD	22.5	0.0	TR	14.8	0.6	0.2	10.2	100 %
Rougher Tails Eastern	33.1	0.0	0.0	3.1	0.0	TR	7.6	100 %
Rougher Tails Western	31	TR	0.0	0.0	0.1	1.1	5.9	100 %

Note:

Quantification using the Rietveld method (HighScore software)
Plagioclase is andesine

Quantification of graphite in sample YA4-CXD not possible because below the detection limit considering the high quartz content.

9.4 QXRD Clay fraction analysis

Although clay minerals are evident in whole rock diffractograms, the most satisfactory method for their quantification is to extract and analyze the clay fraction separately. A 5 g split of the sample that was disaggregated at the first stage of the whole rock preparation (see above) was taken and weighed accurately. The weight was recorded in a central register for later reference. Separating the <2-micron fraction was achieved by ultrasound and centrifugation. The total weight of clay extracted was determined by removing a 20-25g aliquot of the final clay suspension and evaporating to dryness at 80°C. The initial and final weights of the beaker used were also recorded in the register. The clay XRD mount was obtained by filtering the clay suspension through a Millipore glass micro-fiber filter and drying the filtrate on the filter paper. The samples were analyzed as an untreated clay, after saturation with ethylene glycol vapor overnight and following heating at 380°C for 2 hours, with a further heating to 550°C for one hour.

Identification and characterization of clay minerals in the <2 µm fraction has been performed following the guidelines described by Moore & Reynolds (1997) overlaying the diffractograms from the four clay treatments. Clay filters were scanned on a Philips PW1730 Generator using a CuKα radiation at 40 kV and 40 mA. Clay filters were scanned from 3 to 35° (2θ) at a step size of 0.05° and 2 s step time.

The clay quantification has been performed on the oriented samples using a Reference Intensity Ratio based method. Peak intensities are measured and incorporated in a formula to indicate the relative amounts of clay minerals present. This data is then used to quantify the clay minerals with respect to the whole rock by reference to the total amount of <2-micron clay fraction, which is calculated from the aliquot previously extracted and dried. An indication of the clay minerals crystallinity was given by assessment of the peak width for each component.

Table 14. Clay analysis (<2 µm) XRD analysis Aitolampi drill core ore and pilot tailings.

Aitolampi Sample	Mass (g)	Wt. %	Illite/smectite				Mica		
		<2um	% A	% B	Order	% Illite	% A	% B	Crys
PA1-CXD	717.10	2.0	0.0	0.0			26.6	0.5	P
QA2-CXD	692.50	2.1	0.0	0.0			33.5	0.7	P
XA3-CXD	724.10	1.9	0.0	0.0			41.2	0.8	P
YA4-CXD	716.60	2.2	0.0	0.0			33.7	0.7	P
ZA5-CXD	703.80	2.2	0.0	0.0			27.6	0.6	P
Rougher Tails Eastern		2.7	0.0	0.0			54.6	1.5	P
Rougher Tails Western		3.2	0.0	0.0			42.6	1.4	P

Aitolampi Sample	Kaolinite			Chlorite				Quartz	
	% A	% B	Crys	% A	% B	Crys	Y	% A	% B
PA1-CXD	0.0	0.0		34.5	0.7	M	0	38.8	0.8
QA2-CXD	0.0	0.0		27.6	0.6	M	0	38.9	0.8
XA3-CXD	0.0	0.0		23.2	0.4	M	0	35.6	0.7
YA4-CXD	0.0	0.0		38.5	0.8	M	0	27.8	0.6
ZA5-CXD	0.0	0.0		11.0	0.2	M	0	61.5	1.4

A = Weight % relevant size fraction
B = Weight % bulk sample

Mixed-layer Ordering:
R I = Randomly Interstratified (R0)
O = Ordered Interstratification (R1)
LR = Long-range Ordering (R3)

Crystallinity:
VW = Very Well Crystallised
W = Well Crystallised
M = Moderately Crystallised
P = Poorly Crystallised

Y = No. of Fe atoms in six octahedral sites

9.5 Energy dispersive X-ray fluorescence (ED-XRF)

Energy dispersive X-ray fluorescence (ED-XRF) spectrometry is a non-destructive analytical technique used to obtain elemental information from e.g., pellets, cuttings, or powders. Portable ED-XRD allows analysis of ca. 30 geologically important major and trace elements in the field with limit of detection <10 ppm for most of the elements.

The elemental composition of samples was analyzed on powdered material with the measurements were undertaken on a portable benchtop Spectroscout (by Spectro) ED-XRF spectrometer. Approximately four grams of loose powder was measured into an XRF cup consisting of double open ended plastic rings with a thin chemically inert polypropylene film at the base. Samples were run under a vacuum for 6 minutes to achieve full characterization. During the analysis, the sample was rotated to mitigate any voids creased within the sample. Standards were run in the beginning and at the end of the analytical session, and after every ten samples to monitor the stability of the instrument (drift).

Table 15. XRF Major Elements (Scout) in Aitolampi samples.

Aitolampi Sample	Na_2O %	MgO %	Al_2O_3 %	SiO_2 %	P_2O_5 %	K_2O %	CaO %	TiO_2 %	MnO_2 %	Fe_2O_3 %	S %	Total %
PA1-CXD	0.50	5.77	11.70	52.63	0.18	2.84	4.31	0.61	0.08	10.82	4.23	93.7
QA2-CXD	0.85	4.67	12.08	54.47	0.16	3.40	3.18	0.74	0.07	8.79	3.22	91.6
XA3-CXD	1.00	3.84	11.74	61.16	0.20	2.81	2.87	0.78	0.07	8.89	3.59	96.9
YA4-CXF	1.48	3.88	12.48	61.16	0.16	3.08	2.56	0.81	0.06	6.76	2.39	94.8
ZA5-CXF	0.97	5.46	11.93	55.93	0.18	3.14	3.62	0.77	0.08	9.07	4.00	95.1

Table 16. XRF Trace Elements (Scout) in Aitolampi samples – 1.

Aitolampi Sample	V ppm	Cr ppm	Co ppm	Ni ppm	Cu ppm	Zn ppm	Ga ppm	As ppm	Se ppm	Rb ppm	Sr ppm	Y ppm
PA1-CXD	~1276	237.3	60.4	319.1	833.8	2553.0	20.8	<LOD	45.2	109.1	148.6	47.6
QA2-CXD	~1100	229.1	35.1	284.9	406.2	1375.0	20.9	<LOD	38.2	109.0	202.2	43.0
XA3-CXD	469.0	144.3	39.9	157.0	159.0	524.0	15.6	<LOD	8.2	89.0	209.3	29.5
YA4-CXF	234.0	128.4	25.6	96.3	114.6	150.3	17.2	1.8	3.1	88.9	197.5	22.7
ZA5-CXF	~1237	276.4	50.6	226.2	873.4	2595.0	26.4	<LOD	50.2	117.6	196.7	32.1

Note: Values prefixed with ~ can be considered as semi-quantitaive only.
<LOD = Less than Limit of Detection

Table 17. XRF Trace Elements (Scout) in Aitolampi samples – 2.

Aitolampi Sample	Zr ppm	Nb ppm	Mo ppm	Sn ppm	Sb ppm	Cs ppm	Ba ppm	La ppm	Hf ppm	Pb ppm	Th ppm	U ppm
PA1-CXD	152.7	6.6	173.8	<LOD	<LOD	56.2	477.5	130.3	8.0	18.3	5.9	10.1
QA2-CXD	194.1	8.3	148.1	<LOD	<LOD	43.3	593.8	164.3	8.2	17.6	6.8	8.0
XA3-CXD	174.6	5.9	46.1	<LOD	<LOD	49.2	471.9	147.1	13.3	8.3	1.5	<LOD
YA4-CXF	175.3	9.0	15.1	<LOD	11.1	58.9	578.8	142.0	1.4	9.1	2.2	<LOD
ZA5-CXF	138.9	5.7	162.8	<LOD	12.2	40.7	489.1	133.5	6.4	13.0	2.4	8.0

Note: Values prefixed with ~ can be considered as semi-quantitaive only.
<LOD = Less than Limit of Detection

Table 18. XRF Trace Elements (Scout) in Aitolampi samples – 3.

Aitolampi Sample	Bi ppm	Br ppm	Cd ppm	Hg ppm	Ta ppm	W ppm
PA1-CXD	<LOD	<LOD	0.0	<LOD	<LOD	7.9
QA2-CXD	<LOD	<LOD	0.0	<LOD	<LOD	10.4
XA3-CXD	<LOD	<LOD	0.0	<LOD	<LOD	10.4
YA4-CXF	<LOD	<LOD	0.0	<LOD	<LOD	<LOD
ZA5-CXF	<LOD	<LOD	0.0	<LOD	<LOD	9.7

Note: Values prefixed with ~ can be considered as semi-quantitaive only.
<LOD = Less than Limit of Detection

10. APPENDIX 2: GRINDING TESTS, SIEVE ANALYSES.

SCREEN ANALYSIS TABLE

GTK **KTR**
Mintec

Project name : **BF BATCircle2.0 M 3.1.1-3.1.2 Gra. Ref**
Code : **50404-4021027**

Date : 9.-13.5.2022
By : KMS

Note : Elutriation screening 20 µm and Ro-Tap 10 min

Sample data : **Aitolampi samples**

Screen opening (µm)	XA3-AE Ground 20 min.			QA2-AE Ground 20 min.			PA1-AE Ground 20 min.			ZA5-AE Ground 20 min.			YA4-AE Ground 20 min.					
	Weight (g)	Pass. (%)	Frac. (%)	Weight (g)	Pass. (%)	Frac. (%)	Weight (g)	Pass. (%)	Frac. (%)	Weight (g)	Pass. (%)	Frac. (%)	Weight (g)	Pass. (%)	Frac. (%)	Weight (g)	Pass. (%)	Frac. (%)
1000																		
500																		
355	0.00	**100.0**	0.00	0.00	**100.00**	0.00	0.00	**100.0**	0.00	0.00	**100.0**	0.00	0.00	**100.00**	0.00			
250	0.11	**99.9**	0.12	0.20	**99.78**	0.22	0.07	**99.9**	0.08	0.27	**99.7**	0.30	0.13	**99.86**	0.14			
150	4.32	**95.1**	4.76	5.10	**94.12**	5.65	4.00	**95.2**	4.67	5.24	**93.9**	5.75	7.63	**91.49**	8.37			
125	5.18	**89.4**	5.70	5.00	**88.58**	5.54	4.32	**90.2**	5.04	4.66	**88.8**	5.12	8.02	**82.70**	8.79			
90	21.66	**65.6**	23.85	20.50	**65.85**	22.73	18.04	**69.1**	21.06	19.69	**67.2**	21.62	21.99	**58.58**	24.11			
75	10.84	**53.6**	11.94	10.50	**54.21**	11.64	9.73	**57.8**	11.36	10.53	**55.6**	11.56	9.49	**48.17**	10.41			
63	10.27	**42.3**	11.31	10.30	**42.79**	11.42	9.99	**46.1**	11.66	10.33	**44.3**	11.34	9.17	**38.12**	10.06			
45	11.49	**29.7**	12.65	10.80	**30.82**	11.97	10.39	**34.0**	12.13	11.48	**31.7**	12.61	9.62	**27.57**	10.55			
32	7.65	**21.2**	8.43	7.40	**22.62**	8.20	7.44	**25.3**	8.69	8.06	**22.8**	8.85	6.71	**20.21**	7.36			
20	7.64	**12.8**	8.41	7.30	**14.52**	8.09	7.71	**16.3**	9.00	7.69	**14.4**	8.44	6.79	**12.76**	7.45			
-20	11.64		12.82	13.10		14.52	13.96		16.30	13.11		14.40	11.64		12.76			
Total	**90.80**		100.00	**90.20**		100.00	**85.65**		100.00	**91.06**		100.00	**91.19**		100.00			

Calc'd

P 80

(µm)

111	**112**	**108**	**111**	**121**	

SCREEN ANALYSIS TABLE

GTK **KTR**
Mintec

Project name : **BF BATCircle2.0 M 3.1.1-3.1.2 Gra. Ref**
Code : **50404-4021027**

Date : 9-15.8.2022
By : KMS

Note : Elutriation screening 20 µm and Ro-Tap 10 min

Sample data : **Aitolampi samples**

Screen opening (µm)	XA3-AE Ground 30 min.			QA2-AE Ground 30 min.			PA1-AE Ground 30 min.			ZA5-AE Ground 30 min.			YA4-AE Ground 30 min.					
	Weight (g)	Pass. (%)	Frac. (%)	Weight (g)	Pass. (%)	Frac. (%)	Weight (g)	Pass. (%)	Frac. (%)	Weight (g)	Pass. (%)	Frac. (%)	Weight (g)	Pass. (%)	Frac. (%)	Weight (g)	Pass. (%)	Frac. (%)
1000																		
500																		
355	0.00	**100.0**	0.00	0.00	**100.00**	0.00	0.00	**100.0**	0.00	0.00	**100.0**	0.00	0.00	**100.00**	0.00			
250	0.04	**99.9**	0.07	0.05	**99.92**	0.08	0.04	**99.9**	0.07	0.04	**99.9**	0.07	0.03	**99.95**	0.05			
150	1.07	**98.2**	1.78	1.44	**97.53**	2.39	0.95	**98.4**	1.58	1.53	**97.3**	2.60	1.14	**98.07**	1.88			
125	1.32	**96.0**	2.19	1.40	**95.21**	2.32	1.02	**96.7**	1.69	1.42	**94.9**	2.42	1.73	**95.23**	2.85			
90	8.40	**82.0**	13.94	7.57	**82.66**	12.55	5.90	**86.9**	9.80	6.85	**83.3**	11.65	10.78	**77.48**	17.75			
75	7.68	**69.3**	12.75	6.57	**71.76**	10.89	5.59	**77.6**	9.29	6.07	**72.9**	10.32	6.81	**66.27**	11.21			
63	7.71	**56.5**	12.80	7.17	**59.87**	11.89	6.47	**66.8**	10.75	6.74	**61.5**	11.46	6.25	**55.98**	10.29			
45	11.93	**36.7**	19.80	11.39	**40.99**	18.89	12.08	**46.7**	20.07	12.12	**40.9**	20.62	11.03	**37.82**	18.16			
32	6.69	**25.6**	11.10	6.83	**29.66**	11.32	7.50	**34.3**	12.46	7.10	**28.8**	12.08	6.00	**27.94**	9.88			
20	4.47	**18.2**	7.42	4.54	**22.14**	7.53	4.88	**26.2**	8.11	4.10	**21.8**	6.97	4.26	**20.93**	7.01			
-20	10.94		18.16	13.35		22.14	15.75		26.17	12.82		21.81	12.71		20.93			
Total	**60.25**		100.00	**60.31**		100.00	**60.18**		100.00	**58.79**		100.00	**60.74**		100.00			

Calc'd
P 80
(µm)

88	**86**	**79**	**85**	**95**	

SCREEN ANALYSIS TABLE

GTK **KTR**
Mintec

Project name : **BF BATCircle2.0 M 3.1.1-3.1.2 Gra. Ref**
Code : **50404-4021027**

Date : 30.8-1.9.2022
By : KMS

Note : Elutriation screening 20 µm and Ro-Tap 10 min

Sample data : **Aitolampi samples**

Screen opening (µm)	XA3-AE Test 2/RC1-4 ground 10 min			QA2-AE Test 2/RC1-4 ground 10 min			PA1-AE Test 2/RC1-4 ground 10 min			ZA5-AE Test 2/RC1-4 ground 10 min			YA4-AE Test 2/RC1-4 ground 10 min					
	Weight (g)	Pass. (%)	Frac. (%)	Weight (g)	Pass. (%)	Frac. (%)	Weight (g)	Pass. (%)	Frac. (%)	Weight (g)	Pass. (%)	Frac. (%)	Weight (g)	Pass. (%)	Frac. (%)	Weight (g)	Pass. (%)	Frac. (%)
1000																		
500																		
355	0.00	**100.0**	0.00	0.00	**100.00**	0.00	0.00	**100.0**	0.00	0.00	**100.0**	0.00	0.00	**100.00**	0.00			
250	0.08	**99.7**	0.28	0.12	**99.57**	0.43	0.04	**99.9**	0.14	0.11	**99.6**	0.38	0.09	**99.68**	0.32			
150	2.04	**92.5**	7.17	2.20	**91.66**	7.91	1.52	**94.6**	5.29	2.22	**91.9**	7.74	1.93	**92.86**	6.82			
125	1.45	**87.4**	5.10	1.40	**86.62**	5.03	1.15	**90.6**	4.00	1.47	**86.7**	5.13	1.21	**88.59**	4.27			
90	3.29	**75.9**	11.57	3.00	**75.84**	10.79	2.88	**80.6**	10.01	3.24	**75.4**	11.30	2.68	**79.12**	9.47			
75	1.67	**70.0**	5.87	1.46	**70.59**	5.25	1.67	**74.8**	5.81	1.72	**69.4**	6.00	1.41	**74.14**	4.98			
63	1.51	**64.7**	5.31	1.39	**65.59**	5.00	1.63	**69.1**	5.67	1.56	**64.0**	5.44	1.36	**69.34**	4.80			
45	3.15	**53.6**	11.08	3.07	**54.55**	11.04	3.67	**56.3**	12.76	3.15	**53.0**	10.99	2.98	**58.81**	10.53			
32	2.85	**43.6**	10.02	2.84	**44.34**	10.21	3.28	**44.9**	11.40	2.90	**42.9**	10.12	2.76	**49.06**	9.75			
20	2.19	**35.9**	7.70	2.38	**35.78**	8.56	2.92	**34.8**	10.15	2.59	**33.9**	9.03	2.41	**40.55**	8.51			
-20	10.21		35.90	9.95		35.78	10.00		34.77	9.71		33.87	11.48		40.55			
Total	**28.44**		100.00	**27.81**		100.00	**28.76**		100.00	**28.67**		100.00	**28.31**		100.00			

Calc'd
P 80
(µm)

102	**104**	**89**	**104**	**93**	

SCREEN ANALYSIS TABLE

GTK **KTR**
Mintec

Project name : **BF BATCircle2.0 M 3.1.1-3.1.2 Gra. Ref**
Code : **50404-4021027**

Date : 26.9-6.10.2022
By : KMS

Note : Elutriation screening 20 µm and Ro-Tap 10 min

Sample data : **Aitolampi samples**

Screen opening (µm)	XA3-AE Test 3/RC1-4 ground 20 min			QA2-AE Test 3/RC1-4 ground 20 min			PA1-AE Test 3/RC1-4 ground 20 min			ZA5-AE Test 3/RC1-4 ground 20 min			YA4-AE Test 3/RC1-4 ground 20 min					
	Weight (g)	Pass. (%)	Frac. (%)	Weight (g)	Pass. (%)	Frac. (%)	Weight (g)	Pass. (%)	Frac. (%)	Weight (g)	Pass. (%)	Frac. (%)	Weight (g)	Pass. (%)	Frac. (%)	Weight (g)	Pass. (%)	Frac. (%)
1000																		
500																		
355	0.00	**100.0**	0.00	0.00	**100.00**	0.00	0.00	**100.0**	0.00	0.00	**100.0**	0.00	0.00	**100.00**	0.00			
250	0.04	**99.9**	0.14	0.05	**99.81**	0.19	0.02	**99.9**	0.07	0.04	**99.9**	0.14	0.06	**99.79**	0.21			
150	1.86	**93.3**	6.59	1.49	**94.19**	5.62	0.99	**96.5**	3.44	1.47	**94.7**	5.17	1.60	**94.19**	5.60			
125	1.36	**88.5**	4.82	1.18	**89.73**	4.45	0.96	**93.1**	3.34	1.22	**90.4**	4.29	0.99	**90.73**	3.46			
90	3.08	**77.5**	10.91	2.53	**80.18**	9.55	2.38	**84.9**	8.28	2.57	**81.4**	9.04	2.01	**83.69**	7.03			
75	1.61	**71.8**	5.70	1.18	**75.73**	4.45	1.26	**80.5**	4.38	1.30	**76.8**	4.57	0.86	**80.69**	3.01			
63	1.42	**66.8**	5.03	1.39	**70.48**	5.25	1.43	**75.5**	4.97	1.39	**71.9**	4.89	1.01	**77.15**	3.53			
45	2.29	**58.7**	8.11	2.01	**62.89**	7.59	2.49	**66.9**	8.66	2.26	**63.9**	7.95	1.78	**70.92**	6.23			
32	1.71	**52.7**	6.06	1.55	**57.04**	5.85	1.91	**60.2**	6.64	1.67	**58.1**	5.88	1.51	**65.64**	5.28			
20	2.62	**43.4**	9.28	2.31	**48.32**	8.72	3.15	**49.3**	10.96	2.50	**49.3**	8.80	2.66	**56.33**	9.31			
-20	12.25		43.38	12.80		48.32	14.16		49.25	14.00		49.26	16.10		56.33			
Total	**28.24**		100.00	**26.49**		100.00	**28.75**		100.00	**28.42**		100.00	**28.58**		100.00			

Calc'd
P 80
(µm)

XA3-AE	QA2-AE	PA1-AE	ZA5-AE	YA4-AE	
98	**89**	**74**	**86**	**73**	

SCREEN ANALYSIS TABLE

GTK **KTR**
Mintec

Project name : **BF BATCircle2.0 M 3.1.1-3.1.2 Gra. Ref**
Code : **50404-4021027**

Date : 21.12.2022-11.1.2023
By : KMS

Note : Elutriation screening 20 µm and Ro-Tap 10 min

Sample data : **Aitolampi samples**

Screen opening (µm)	XA3-AE Test 4/RC1-2 ground 40 min			YA4-AE Test 4/RC1-2 ground 40 min			ZA5-AE Test 4/RC1-2 ground 40 min			QA2-AE Test 4/RC1-2 ground 40 min			PA1-AE Test 4/RC1-2 ground 40 min					
	Weight (g)	Pass. (%)	Frac. (%)	Weight (g)	Pass. (%)	Frac. (%)	Weight (g)	Pass. (%)	Frac. (%)	Weight (g)	Pass. (%)	Frac. (%)	Weight (g)	Pass. (%)	Frac. (%)	Weight (g)	Pass. (%)	Frac. (%)
1000																		
500																		
355	0.00	**100.0**	0.00	0.00	**100.00**	0.00	0.00	**100.0**	0.00	0.00	**100.0**	0.00	0.00	**100.00**	0.00			
250	0.06	**99.7**	0.25	0.00	**100.00**	0.00	0.00	**100.0**	0.00	0.00	**100.0**	0.00	0.00	**100.00**	0.00			
150	0.70	**96.8**	2.94	0.96	**95.90**	4.10	0.13	**99.5**	0.55	0.20	**99.2**	0.85	0.04	**99.83**	0.17			
125	0.96	**92.8**	4.03	0.85	**92.26**	3.63	0.44	**97.6**	1.85	0.41	**97.4**	1.74	0.19	**99.03**	0.80			
90	2.26	**83.3**	9.48	1.86	**84.32**	7.95	1.64	**90.7**	6.90	1.49	**91.1**	6.31	1.08	**94.47**	4.56			
75	1.61	**76.6**	6.75	1.15	**79.40**	4.91	1.54	**84.2**	6.48	1.35	**85.4**	5.71	1.18	**89.50**	4.98			
63	0.88	**72.9**	3.69	1.34	**73.68**	5.73	1.94	**76.1**	8.16	1.97	**77.1**	8.34	1.80	**81.91**	7.59			
45	2.04	**64.3**	8.56	1.71	**66.37**	7.31	2.75	**64.5**	11.57	2.33	**67.2**	9.86	2.32	**72.12**	9.78			
32	1.20	**59.3**	5.03	0.97	**62.22**	4.15	1.27	**59.1**	5.35	1.27	**61.8**	5.37	1.24	**66.89**	5.23			
20	0.68	**56.4**	2.85	0.98	**58.03**	4.19	1.02	**54.8**	4.29	1.22	**56.7**	5.16	1.44	**60.82**	6.07			
-20	13.45		56.42	13.58		58.03	13.03		54.84	13.39		56.67	14.42		60.82			
Total	**23.84**		100.00	**23.40**		100.00	**23.76**		100.00	**23.63**		100.00	**23.71**		100.00			

Calc'd
P 80
(µm)

XA3-AE	YA4-AE	ZA5-AE	QA2-AE	PA1-AE	
83	**77**	**69**	**67**	**59**	

Beckman Coulter LS Particle Size Analyzer

16 Mar 2023 10:46

GTK Mintec

File name:	C:\DATA\Tero Korhonen\BatCircle\PA1-AE Test 5_02_01.$ls PA1-AE Test 5_02_01.$ls		
File ID:	PA1-AE Test 5		
Sample ID:	PA1-AE Test 5		
Operator:	MKP		
Run number:	2		
Comment 1:	wet module		
Comment 2:	0,080 g		
Optical model:	Fraunhofer.rf780d		
Residual:	0,48%		
LS 13 320	Aqueous Liquid Module		
Start time:	10:44 16 Mar 2023	Run length:	94 seconds
Pump speed:	75		
Obscuration:	16%	PIDS Obscur:	80%
Fluid:	Water		
Software:	6.01	Firmware:	2.02

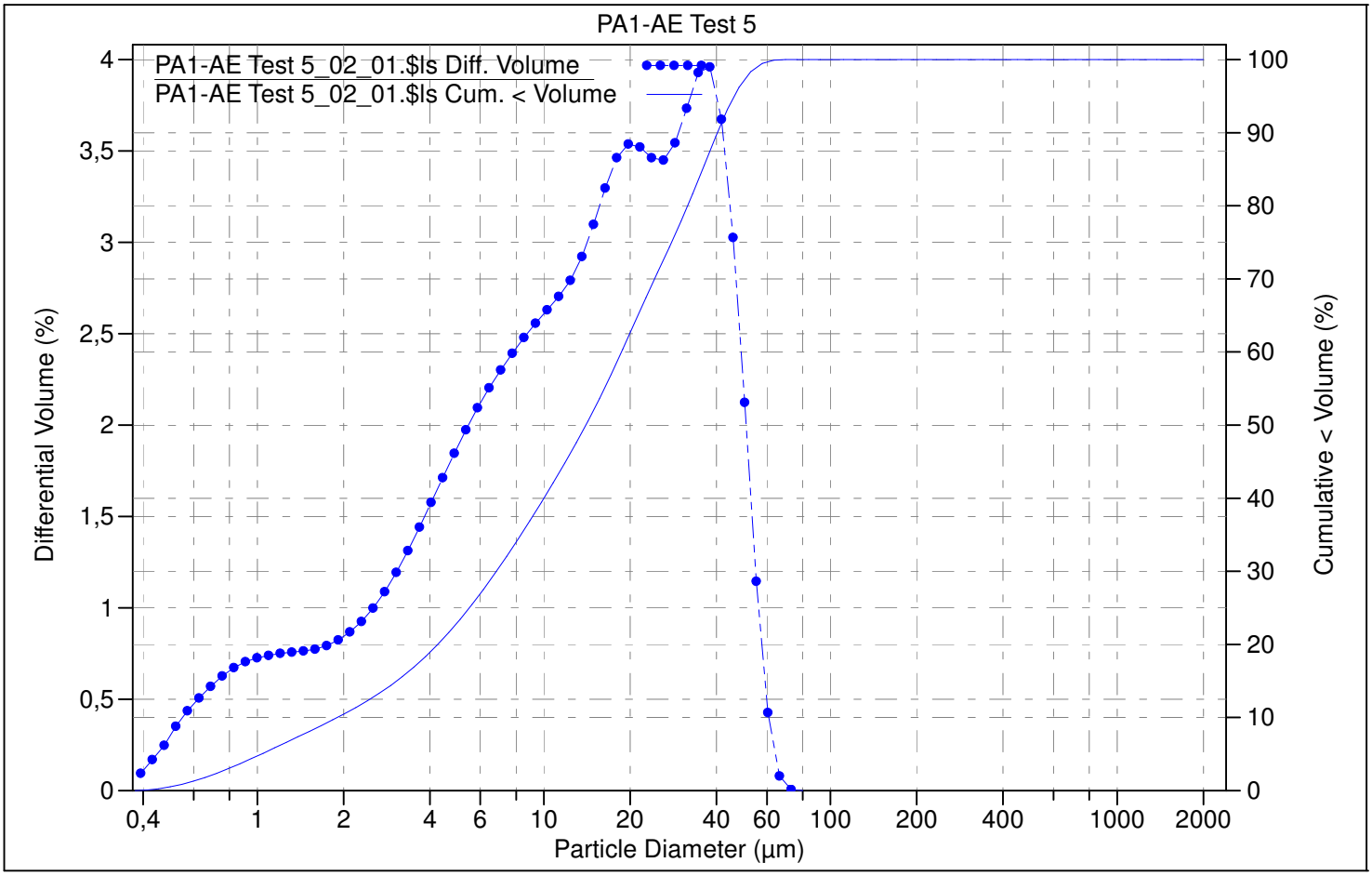

Volume Statistics (Arithmetic) PA1-AE Test 5_02_01.$ls

Calculations from 0,375 µm to 2000 µm

Volume:	100%		
Mean:	17,87 µm	S.D.:	14,61 µm
Median:	14,03 µm	Variance:	213,4 µm^2
Mean/Median ratio:	1,274	C.V.:	81,7%
Mode:	37,97 µm	Skewness:	0,792 Right skewed
		Kurtosis:	-0,311 Platykurtic

d_{10}: 1,900 µm d_{50}: 14,03 µm d_{90}: 40,29 µm

<10%	<25%	<50%	<75%	<80%	<90%	<95%
1,900 µm	5,497 µm	14,03 µm	27,88 µm	31,73 µm	40,29 µm	46,22 µm

Volume %	PA1-AE Test 5_02 _01.$ls Particle Diameter µm <
10	1,900
25	5,497
50	14,03
75	27,88
80	31,73
90	40,29
95	46,22

PA1-AE Test 5_02_01.$ls

Channel Diameter (Lower) µm	Diff. Volume %	Cum. < Volume %	Channel Diameter (Lower) µm	Diff. Volume %	Cum. < Volume %
0,375	0,095	0	3,519	1,44	16,9
0,412	0,17	0,095	3,863	1,58	18,3
0,452	0,25	0,26	4,241	1,71	19,9
0,496	0,35	0,51	4,656	1,85	21,6
0,545	0,44	0,86	5,111	1,97	23,5
0,598	0,51	1,30	5,611	2,09	25,4
0,657	0,57	1,81	6,159	2,20	27,5
0,721	0,63	2,38	6,761	2,30	29,7
0,791	0,67	3,00	7,422	2,39	32,0
0,869	0,71	3,68	8,148	2,48	34,4
0,954	0,73	4,38	8,944	2,56	36,9
1,047	0,74	5,11	9,819	2,63	39,5
1,149	0,75	5,85	10,78	2,70	42,1
1,261	0,76	6,60	11,83	2,79	44,8
1,385	0,76	7,36	12,99	2,92	47,6
1,520	0,77	8,12	14,26	3,10	50,5
1,669	0,79	8,89	15,65	3,30	53,6
1,832	0,82	9,69	17,18	3,46	56,9
2,011	0,87	10,5	18,86	3,54	60,4
2,208	0,92	11,4	20,71	3,52	63,9
2,423	1,00	12,3	22,73	3,46	67,4
2,660	1,09	13,3	24,95	3,45	70,9
2,920	1,19	14,4	27,39	3,54	74,4
3,206	1,31	15,6	30,07	3,73	77,9

PA1-AE Test 5_02_01.$ls

Channel Diameter (Lower) µm	Diff. Volume %	Cum. < Volume %
33,01	3,93	81,6
36,24	3,96	85,6
39,78	3,67	89,5
43,67	3,03	93,2
47,94	2,12	96,2
52,63	1,15	98,3
57,77	0,43	99,5
63,42	0,080	99,9
69,62	0,0062	99,99
76,43	0	100
83,90	0	100
92,10	0	100
101,1	0	100
111,0	0	100
121,8	0	100
133,7	0	100
146,8	0	100
161,2	0	100
176,9	0	100
194,2	0	100
213,2	0	100
234,1	0	100
256,9	0	100
282,1	0	100
309,6	0	100
339,9	0	100
373,1	0	100
409,6	0	100
449,7	0	100
493,6	0	100
541,9	0	100
594,9	0	100
653,0	0	100
716,9	0	100
786,9	0	100
863,9	0	100
948,3	0	100
1041	0	100
1143	0	100
1255	0	100
1377	0	100
1512	0	100
1660	0	100
1822	0	100
2000		100

Beckman Coulter LS Particle Size Analyzer

16 Mar 2023 10:32

GTK Mintec

File name:	C:\DATA\Tero Korhonen\BatCircle\QA2-AE Test 5_02_01.$ls QA2-AE Test 5_02_01.$ls		
File ID:	QA2-AE Test 5		
Sample ID:	QA2-AE Test 5		
Operator:	MKP		
Run number:	2		
Comment 1:	wet module		
Comment 2:	0,080 g		
Optical model:	Fraunhofer.rf780d		
Residual:	0,48%		
LS 13 320	Aqueous Liquid Module		
Start time:	10:30 16 Mar 2023	Run length:	94 seconds
Pump speed:	75		
Obscuration:	15%	PIDS Obscur:	76%
Fluid:	Water		
Software:	6.01	Firmware:	2.02

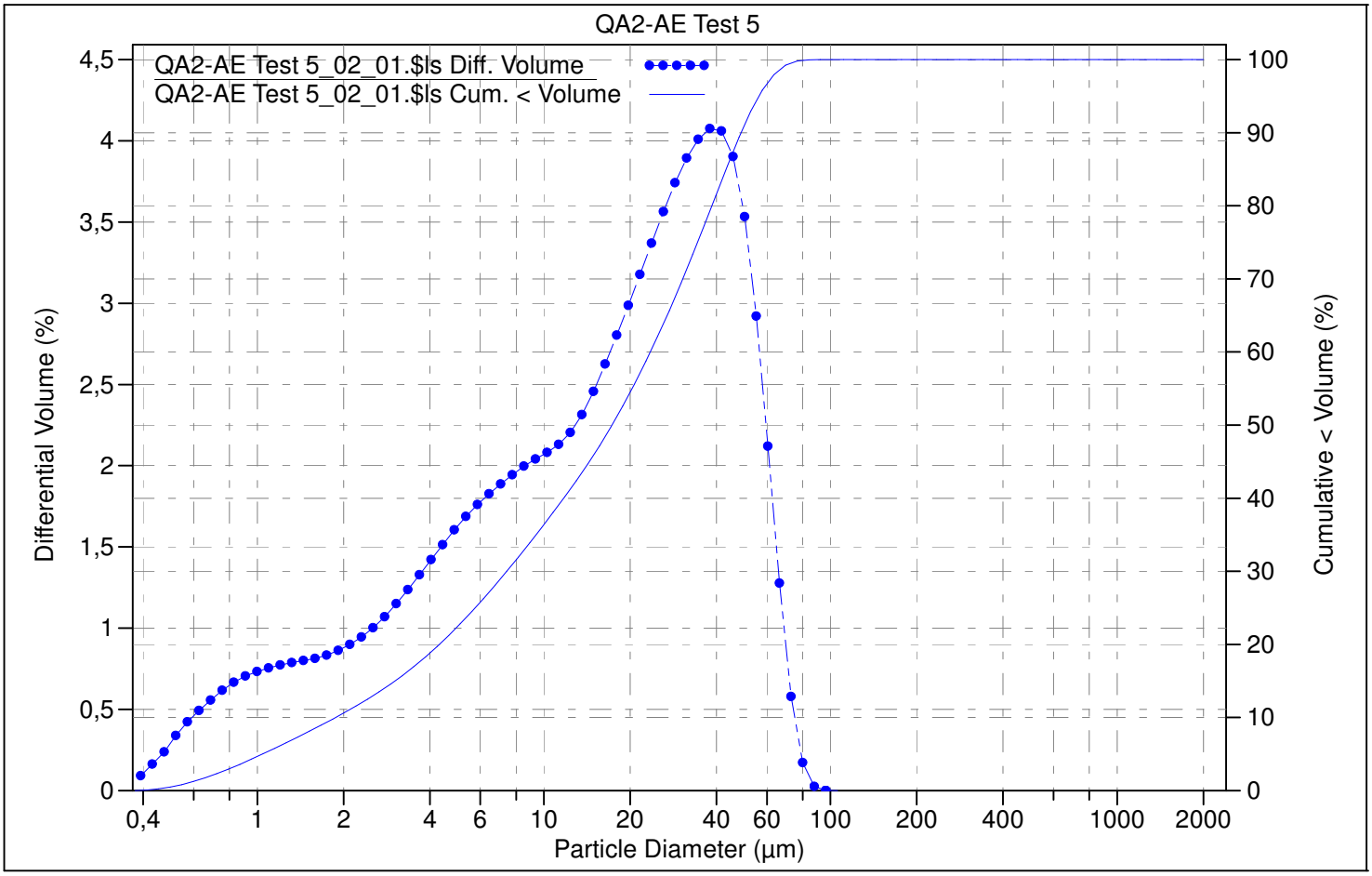

Volume Statistics (Arithmetic) QA2-AE Test 5_02_01.$ls

Calculations from 0,375 µm to 2000 µm

Volume:	100%		
Mean:	21,68 µm	S.D.:	18,10 µm
Median:	17,31 µm	Variance:	327,8 µm^2
Mean/Median ratio:	1,252	C.V.:	83,5%
Mode:	37,97 µm	Skewness:	0,764 Right skewed
		Kurtosis:	-0,314 Platykurtic

d_{10}: 1,875 µm d_{50}: 17,31 µm d_{90}: 48,77 µm

<10%	<25%	<50%	<75%	<80%	<90%	<95%
1,875 µm	5,761 µm	17,31 µm	34,36 µm	38,56 µm	48,77 µm	56,32 µm

Volume %	QA2-AE Test 5_02 _01.$ls Particle Diameter µm <
10	1,875
25	5,761
50	17,31
75	34,36
80	38,56
90	48,77
95	56,32

QA2-AE Test 5_02_01.$ls

Channel Diameter (Lower) µm	Diff. Volume %	Cum. < Volume %	Channel Diameter (Lower) µm	Diff. Volume %	Cum. < Volume %
0,375	0,092	0	3,519	1,33	17,0
0,412	0,16	0,092	3,863	1,42	18,3
0,452	0,24	0,25	4,241	1,51	19,7
0,496	0,34	0,49	4,656	1,60	21,2
0,545	0,42	0,83	5,111	1,69	22,8
0,598	0,49	1,25	5,611	1,76	24,5
0,657	0,56	1,75	6,159	1,83	26,3
0,721	0,62	2,31	6,761	1,89	28,1
0,791	0,67	2,92	7,422	1,94	30,0
0,869	0,71	3,59	8,148	2,00	31,9
0,954	0,73	4,30	8,944	2,04	33,9
1,047	0,75	5,03	9,819	2,08	36,0
1,149	0,77	5,78	10,78	2,13	38,1
1,261	0,79	6,56	11,83	2,20	40,2
1,385	0,80	7,34	12,99	2,31	42,4
1,520	0,81	8,14	14,26	2,46	44,7
1,669	0,83	8,96	15,65	2,63	47,2
1,832	0,86	9,79	17,18	2,80	49,8
2,011	0,90	10,7	18,86	2,99	52,6
2,208	0,95	11,6	20,71	3,18	55,6
2,423	1,00	12,5	22,73	3,37	58,8
2,660	1,07	13,5	24,95	3,56	62,1
2,920	1,15	14,6	27,39	3,74	65,7
3,206	1,24	15,7	30,07	3,89	69,4

QA2-AE Test 5_02_01.$ls

Channel Diameter (Lower) µm	Diff. Volume %	Cum. < Volume %
33,01	4,01	73,3
36,24	4,07	77,3
39,78	4,06	81,4
43,67	3,90	85,5
47,94	3,53	89,4
52,63	2,92	92,9
57,77	2,12	95,8
63,42	1,28	97,9
69,62	0,58	99,2
76,43	0,17	99,8
83,90	0,026	99,97
92,10	0,0013	99,999
101,1	0	100
111,0	0	100
121,8	0	100
133,7	0	100
146,8	0	100
161,2	0	100
176,9	0	100
194,2	0	100
213,2	0	100
234,1	0	100
256,9	0	100
282,1	0	100
309,6	0	100
339,9	0	100
373,1	0	100
409,6	0	100
449,7	0	100
493,6	0	100
541,9	0	100
594,9	0	100
653,0	0	100
716,9	0	100
786,9	0	100
863,9	0	100
948,3	0	100
1041	0	100
1143	0	100
1255	0	100
1377	0	100
1512	0	100
1660	0	100
1822	0	100
2000		100

Beckman Coulter LS Particle Size Analyzer

16 Mar 2023 10:17

GTK Mintec

File name:	C:\DATA\Tero Korhonen\BatCircle\ZA5-AE Test 5_06_01.$ls ZA5-AE Test 5_06_01.$ls		
File ID:	ZA5-AE Test 5		
Sample ID:	ZA5-AE Test 5		
Operator:	MKP		
Run number:	6		
Comment 1:	wet module		
Comment 2:	0,049 g		
Optical model:	Fraunhofer.rf780d		
Residual:	0,31%		
LS 13 320	Aqueous Liquid Module		
Start time:	10:15 16 Mar 2023	Run length:	94 seconds
Pump speed:	75		
Obscuration:	10%	PIDS Obscur:	63%
Fluid:	Water		
Software:	6.01	Firmware:	2.02

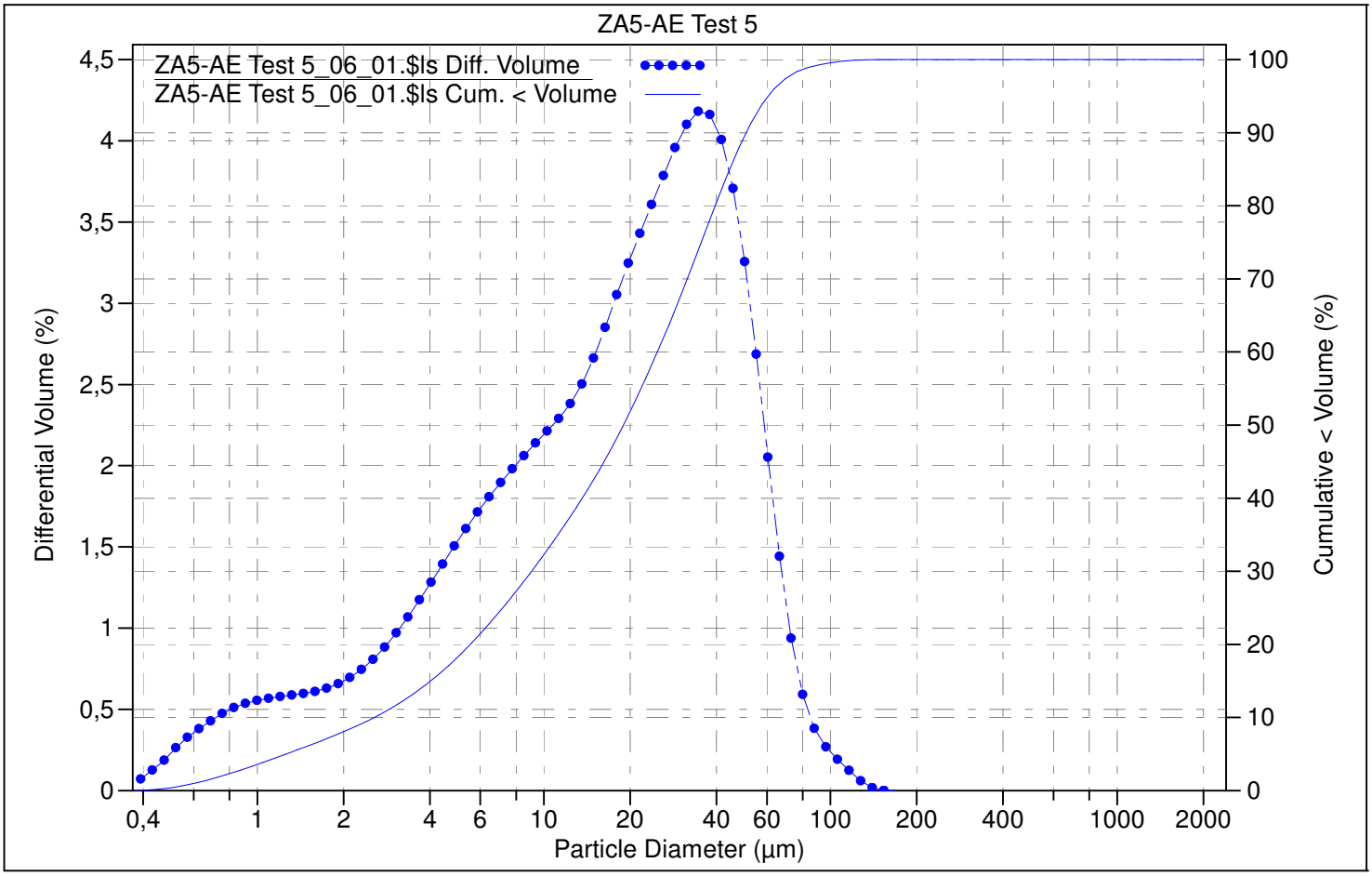

Volume Statistics (Arithmetic) ZA5-AE Test 5_06_01.$ls

Calculations from 0,375 µm to 2000 µm

Volume:	100%		
Mean:	23,55 µm	S.D.:	19,86 µm
Median:	18,98 µm	Variance:	394,6 µm^2
Mean/Median ratio:	1,241	C.V.:	84,3%
Mode:	34,59 µm	Skewness:	1,191 Right skewed
		Kurtosis:	1,799 Leptokurtic

d_{10}: 2,559 µm d_{50}: 18,98 µm d_{90}: 50,84 µm

<10%	<25%	<50%	<75%	<80%	<90%	<95%
2,559 µm	7,193 µm	18,98 µm	35,38 µm	39,55 µm	50,84 µm	60,73 µm

Volume %	ZA5-AE Test 5_06 _01.$ls Particle Diameter µm <
10	2,559
25	7,193
50	18,98
75	35,38
80	39,55
90	50,84
95	60,73

ZA5-AE Test 5_06_01.$ls

Channel Diameter (Lower) µm	Diff. Volume %	Cum. < Volume %	Channel Diameter (Lower) µm	Diff. Volume %	Cum. < Volume %
0,375	0,071	0	3,519	1,17	13,3
0,412	0,13	0,071	3,863	1,28	14,4
0,452	0,19	0,20	4,241	1,39	15,7
0,496	0,26	0,38	4,656	1,51	17,1
0,545	0,33	0,65	5,111	1,61	18,6
0,598	0,38	0,98	5,611	1,71	20,2
0,657	0,43	1,36	6,159	1,81	22,0
0,721	0,47	1,79	6,761	1,90	23,8
0,791	0,51	2,26	7,422	1,98	25,7
0,869	0,54	2,77	8,148	2,06	27,6
0,954	0,55	3,31	8,944	2,14	29,7
1,047	0,57	3,86	9,819	2,21	31,8
1,149	0,58	4,43	10,78	2,29	34,1
1,261	0,59	5,01	11,83	2,38	36,3
1,385	0,60	5,60	12,99	2,50	38,7
1,520	0,61	6,20	14,26	2,66	41,2
1,669	0,63	6,81	15,65	2,85	43,9
1,832	0,66	7,44	17,18	3,05	46,7
2,011	0,70	8,09	18,86	3,25	49,8
2,208	0,75	8,79	20,71	3,43	53,0
2,423	0,81	9,54	22,73	3,61	56,5
2,660	0,88	10,3	24,95	3,79	60,1
2,920	0,97	11,2	27,39	3,96	63,9
3,206	1,07	12,2	30,07	4,10	67,8

ZA5-AE Test 5_06_01.$ls

Channel Diameter (Lower) µm	Diff. Volume %	Cum. < Volume %
33,01	4,18	71,9
36,24	4,16	76,1
39,78	4,01	80,3
43,67	3,71	84,3
47,94	3,26	88,0
52,63	2,69	91,2
57,77	2,05	93,9
63,42	1,44	96,0
69,62	0,94	97,4
76,43	0,59	98,4
83,90	0,38	98,9
92,10	0,27	99,3
101,1	0,19	99,6
111,0	0,12	99,8
121,8	0,060	99,9
133,7	0,018	99,98
146,8	0,0027	99,997
161,2	0,00011	100
176,9	0	100
194,2	0	100
213,2	0	100
234,1	0	100
256,9	0	100
282,1	0	100
309,6	0	100
339,9	0	100
373,1	0	100
409,6	0	100
449,7	0	100
493,6	0	100
541,9	0	100
594,9	0	100
653,0	0	100
716,9	0	100
786,9	0	100
863,9	0	100
948,3	0	100
1041	0	100
1143	0	100
1255	0	100
1377	0	100
1512	0	100
1660	0	100
1822	0	100
2000		100

11. APPENDIX 3: FLOTATION TEST REPORTS.

FLOTATION TEST REPORT

Sample:	Aitolampi XA3-AE	**Grind:** Mill:	Mild steel
Project:	BF BATCircle2 50404-4021027	Charge:	8 kg rods
Date:	´15.8.2022	Water:	0.9 l
Author:	KMS	**Feed**	1.5 kg
Test no.:	**1**	**Screen anal:**	

Remarks:

Primary grinding fineness D80 ~ 88 µm

Feed	Grind	Cond	Reagents (g/t)						Cell	Air	Rotor	pH	Flot	Product	Weight		Grades and Recoveries															
																	C (Leco)		SiO2 (XRF)		Al2O3 (XRF)		MgO (XRF)		CaO (XRF)		Na2O (XRF)		Fe (XRF)		S (Leco)	
	min	min			Na2SiO3 5%	Kerosene 100%	MIBC 100%		l	l/min	rpm		min		g	%	%	Rec%	%	Rec%	%	Rec%	%	Rec%	%	Rec%	%	Rec%	%	Rec%	%	Rec%
35 mm	30																															
									4		1800	8.5																				
		3			500						"	9																				
		2				40	40				"	"																				
										3	"	8.4	3	RC1	95.4	9.5	48.40	98.01	26.20	4.32	7.63	6.09	2.09	5.85	1.42	6.04	1.20	4.60	2.25	2.71	1.12	2.26
											"	"																				
		2				30	30				"	"																				
										3	"	"	4	RC2	16.8	1.7	2.33	0.83	60.10	1.75	15.60	2.19	3.70	1.82	2.90	2.17	3.13	2.11	5.00	1.06	2.54	0.90
											"	"		RC1-2	112.2	11.2	41.50	98.84	31.28	6.07	8.82	8.28	2.33	7.67	1.64	8.21	1.49	6.71	2.66	3.76	1.33	3.16
		2				30	30				"	8.3																				
										3	"	8.3	4	RC3	8.7	0.9	1.33	0.25	60.10	0.9	15.40	1.1	3.85	1.0	2.77	1.07	3.06	1.1	5.63	0.6	2.98	0.5
											"	"		RC1-3	120.9	12.1	38.61	99.08	33.35	6.97	9.30	9.40	2.44	8.66	1.72	9.29	1.60	7.78	2.88	4.38	1.45	3.71
		2				20	20				"	8.2																				
										3	"	8.2	4	RC4	6.6	0.7	0.45	0.06	61.10	0.70	15.00	0.83	3.76	0.73	2.75	0.81	3.02	0.80	5.94	0.49	2.92	0.41
														RC1-4	127.5	12.7	36.64	99.15	34.79	7.67	9.59	10.23	2.51	9.38	1.78	10.10	1.68	8.58	3.03	4.88	1.53	4.11
														Tails	872.6	87.3	0.05	0.85	61.20	92.33	12.30	89.77	3.54	90.62	2.31	89.90	2.61	91.42	8.65	95.12	5.20	95.89
Total	30	11			500	120	120					Total	15	Calc Feed	1000.1	100.0	4.71	100.0	57.83	100.0	11.95	100.0	3.41	100.0	2.24	100.0	2.49	100.0	7.93	100.0	4.73	100.0

FLOTATION TEST REPORT

Sample:	Aitolampi XA3-AE	**Grind:** Mill:	Mild steel
Project:	BF BATCircle2 50404-4021027	Charge:	8 kg rods
Date:	23.8.2022	Water:	0.9 l
Author:	KMS	**Feed**	1.5 kg
Test no.:	**2**	**Screen anal:**	

Remarks:

Primary grinding fineness D80 ~ 88 µm
Secondary grinding fineness D80 ~ 102 µm

Feed	Grind min	Cond min	Reagents (g/t)						Cell l	Air l/min	Rotor rpm	pH	Flot min	Product	Weight		Grades and Recoveries															
					Na2SiO3	Kerosene	MIBC										C (Leco)		SiO2 (XRF)		Al2O3 (XRF)		MgO (XRF)		CaO (XRF)		Na2O (XRF)		Fe (XRF)		S (Leco)	
					5%	100%	100%								g	%	%	Rec%	%	Rec%	%	Rec%	%	Rec%	%	Rec%	%	Rec%	%	Rec%	%	Rec%
35 mm	30																															
									4		1800	8.6																				
		3			500						"	9																				
		2				40	40				"	"																				
										3	"	8.4	3	RC1																	
											"	"																				
		2				30	30				"	"																				
										3	"	8.5	4	RC2																	
											"	"		RC1-2																		
		2				30	30				"	8.4																				
										3	"	8.3	4	RC3																	
											"	"		RC1-3																		
		2				20	20				"	8.3																				
										3	"	8.2	4	RC4																	
														RC1-4	131.1	13.1	38.28	99.52	36.21	8.17	9.74	10.66	2.41	9.34	1.42	8.48	1.86	9.65	3.85	6.32	1.62	4.39
														Tails	869.7	86.9	0.03	0.48	61.30	91.83	12.30	89.34	3.52	90.66	2.31	91.52	2.62	90.35	8.59	93.68	5.32	95.61
RC1-4	10								1.5		1100	8.9																				
		2				20	20				"	"																				
										1.5	"	8.3	7	CC1	67.4	6.7	74.24	99.19	13.33	1.55	4.30	2.42	1.37	2.74	1.42	4.36	0.61	1.62	1.41	1.19	0.50	0.69
														CT1	63.7	6.4	0.26	0.32	60.40	6.63	15.50	8.25	3.50	6.60	1.42	4.12	3.18	8.03	6.42	5.13	2.81	3.70
CC1									1.5		1100	8.3																				
		2				10	10				"	"																				
										1.5	"	8	5	CC2	59.5	5.9	83.82	98.91	7.34	0.75	2.68	1.33	1.04	1.84	1.42	3.85	0.28	0.65	0.87	0.65	0.29	0.36
														CT2	7.9	0.8	1.83	0.29	58.60	0.79	16.50	1.08	3.85	0.90	1.42	0.51	3.10	0.97	5.53	0.55	2.02	0.33
CC2									1.5		1100	8.3																				
											"	"																				
										1.5	"	8.1	3	CC3	55.3	5.5	88.60	97.17	5.23	0.50	2.02	0.93	0.85	1.39	1.42	3.58	0.17	0.37	0.73	0.51	0.24	0.28
														CT3	4.2	0.4	20.90	1.74	35.10	0.25	11.40	0.40	3.59	0.45	1.42	0.27	1.69	0.28	2.68	0.14	0.97	0.08
Total	40	15			500	150	150					Total	30	Calc Feed	1000.8	100.0	5.04	100.0	58.01	100.0	11.97	100.0	3.37	100.0	2.19	100.0	2.52	100.0	7.97	100.0	4.84	100.0

FLOTATION TEST REPORT

Sample:	Aitolampi XA3-AE	**Grind:** Mill:	Mild steel
Project:	BF BATCircle2 50404-4021027	Charge:	8 kg rods
Date:	23.9-26.9.2022	Water:	0.9 l
Author:	KMS	**Feed**	1.5 kg
Test no.:	**3**	**Screen anal:**	

Remarks:

Primary grinding fineness D80 ~ 88 µm
Secondary grinding fineness D80 ~ 98 µm

Feed	Grind min	Cond min	Reagents (g/t)						Cell l	Air l/min	Rotor rpm	pH	Flot min	Product	Weight		Grades and Recoveries															
					Na2SiO3 5%	Kerosene 100%	MIBC 100%										C (Leco)		SiO2 (XRF)		Al2O3 (XRF)		MgO (XRF)		CaO (XRF)		Na2O (XRF)		Fe (XRF)		S (Leco)	
															g	%	%	Rec%	%	Rec%	%	Rec%	%	Rec%	%	Rec%	%	Rec%	%	Rec%	%	Rec%
35 mm	30																															
					LIMS 0.07 T (about 10 % solids)									M1	105.4	10.6	0.53	1.12	7.17	1.29	1.64	1.44	0.42	1.32	0.29	1.34	0.42	1.80	50.90	70.94	35.65	79.96
														NM1	888.5	89.4	5.57	98.88	64.91	98.71	13.36	98.56	3.72	98.68	2.50	98.66	2.71	98.20	2.47	29.06	1.06	20.04
NM1					MIMS 0.3 T (about 10 % solids)									M2	23.6	2.4	1.54	0.73	44.60	1.80	10.30	2.02	2.14	1.51	1.95	2.04	2.54	2.44	19.70	6.13	14.07	7.05
														M1-M2	129.0	13.0	0.71	1.84	14.01	3.09	3.22	3.45	0.73	2.83	0.59	3.38	0.81	4.24	45.20	77.07	31.71	87.02
														NM2	865.0	87.0	5.68	98.16	65.46	96.91	13.44	96.55	3.76	97.17	2.52	96.62	2.72	95.76	2.01	22.93	0.71	12.98
NM2									4		1800																					
		3			500						"	8.7																				
		2				40	40				"	"																				
										3	"	8.6	3	RC1																	
											"	"																				
		2				30	30				"	"																				
										3	"	8.5	4	RC2																	
											"	"		RC1-2																		
		2				30	30				"	8.4																				
										3	"	8.3	4	RC3																	
											"	"		RC1-3																		
		2				20	20				"	8.3																				
										3	"	8.3	4	RC4																	
														RC1-4	119.6	12.0	40.87	97.70	36.52	7.47	9.97	9.89	2.40	8.58	1.82	9.64	1.88	9.18	2.60	4.11	0.68	1.74
														Tails	745.4	75.0	0.03	0.46	70.10	89.44	14.00	86.66	3.98	88.60	2.63	86.98	2.85	86.58	1.91	18.82	0.71	11.24
RC1-4	20								1.5		1100	8.7																				
		2				20	20				"	"																				
										1.5	"	8.4	7	CC1	61.6	6.2	79.07	97.42	12.01	1.27	3.73	1.91	1.13	2.07	0.63	1.73	0.55	1.39	1.16	0.94	0.39	0.51
														CT1	57.9	5.8	0.23	0.27	62.60	6.21	16.60	7.98	3.76	6.50	3.08	7.92	3.30	7.79	4.14	3.17	1.00	1.23
CC1									1.5		1100	8.3																				
		2				10	10				"	"																				
										1.5	"	8.1	5	CC2	53.2	5.3	91.23	96.94	4.46	0.41	1.68	0.74	0.70	1.10	0.24	0.57	0.15	0.33	0.62	0.44	0.29	0.33
														CT2	8.5	0.9	2.87	0.49	59.30	0.86	16.60	1.17	3.83	0.97	3.06	1.15	3.06	1.06	4.49	0.50	1.02	0.18
CC2									1.5		1100	8.2																				
											"	"																				
										1.5	"	8	3	CC3	49.4	5.0	94.30	93.17	3.22	0.27	1.30	0.53	0.59	0.87	0.17	0.37	0.09	0.18	0.52	0.34	0.26	0.27
														CT3	3.7	0.4	50.50	3.77	20.90	0.13	6.66	0.21	2.09	0.23	1.23	0.20	0.98	0.15	2.00	0.10	0.64	0.05
Total	50	15			500	150	150					Total	30	Calc Feed	994.0	100.0	5.03	100.0	58.78	100.0	12.12	100.0	3.37	100.0	2.27	100.0	2.47	100.0	7.61	100.0	4.73	100.0

FLOTATION TEST REPORT

Sample:	Aitolampi XA3-AE	**Grind:** Mill:	Mild steel
Project:	BF BATCircle2 50404-4021027	Charge:	8 kg rods
Date:	19-21.12.2022	Water:	0.9 l
Author:	KMS	**Feed**	1.5 kg
Test no.:	**4**	**Screen anal:**	

Remarks:

Primary grinding fineness D80 ~ 88 µm
Secondary grinding fineness D80 ~83 µm

Feed	Grind	Cond	Reagents (g/t)						Cell	Air	Rotor	pH	Flot	Product	Weight		Grades and Recoveries															
																	C (Leco)		SiO2 (XRF)		Al2O3 (XRF)		MgO (XRF)		CaO (XRF)		Na2O (XRF)		Fe (XRF)		S (Leco)	
	min	min			Na2SiO3 5%	Kerosene 100%	MIBC 100%		l	l/min	rpm		min		g	%	%	Rec%	%	Rec%	%	Rec%	%	Rec%	%	Rec%	%	Rec%	%	Rec%	%	Rec%
35 mm	30																															
					MIMS 0.3 T (about 10 % solids)									M1	112.0	11.2	0.30	0.72	6.07	1.16	1.80	1.65	0.38	1.28	0.30	1.48	0.53	2.36	51.60	74.34	36.10	86.15
														NM1	885.9	88.8	5.25	99.28	65.25	98.84	13.59	98.35	3.72	98.72	2.56	98.52	2.77	97.64	2.25	25.66	0.73	13.85
NM1									4		1800	7.8																				
		3			500						"	8.5																				
		2				40	40				"	"																				
										3	"	8.4	3	RC1																	
											"	"																				
		2				30	30				"	8.3																				
										3	"	8.3	4	RC2																		
														RC1-2	103.1	10.3	44.86	98.72	31.47	5.55	8.92	7.52	2.16	6.69	1.62	7.28	1.59	6.53	4.32	5.73	0.61	1.34
														Tails	782.8	78.4	0.03	0.55	69.70	93.29	14.20	90.84	3.92	92.04	2.68	91.25	2.93	91.12	1.98	19.94	0.75	12.51
RC1-2	40								1.5		1100	8.2																				
		2				20	20				"	8.4																				
										1.5	"	7.9	7	CC1	48.1	4.8	85.11	87.39	7.32	0.60	2.09	0.82	0.46	0.67	0.40	0.84	0.34	0.65	1.47	0.91	0.28	0.28
														CT1	55.0	5.5	9.65	11.33	52.60	4.95	14.90	6.70	3.65	6.02	2.69	6.44	2.69	5.88	6.81	4.82	0.90	1.05
CC1									1.5		1100	8																				
		2				10	10				"	"																				
										1.5	"	7.9	5	CC2	42.6	4.3	94.01	85.49	2.36	0.17	0.74	0.26	0.21	0.27	0.14	0.25	0.08	0.14	0.64	0.35	0.20	0.18
														CT2	5.5	0.6	16.20	1.90	45.70	0.43	12.50	0.56	2.40	0.40	2.45	0.59	2.34	0.51	7.92	0.56	0.87	0.10
CC2									1.5		1100	8																				
											"	"																				
										1.5	"	8	3	CC3	27.7	2.8	95.20	56.29	1.64	0.08	0.55	0.12	0.17	0.14	0.10	0.12	0.05	0.06	0.52	0.19	0.19	0.11
														CT3	14.9	1.5	91.80	29.20	3.70	0.09	1.10	0.13	0.29	0.13	0.22	0.14	0.14	0.08	0.86	0.16	0.22	0.07
Total	70	11			500	100	100					Total	22	Calc Feed	997.9	100.0	4.69	100.0	58.61	100.0	12.26	100.0	3.34	100.0	2.30	100.0	2.52	100.0	7.79	100.0	4.70	100.0

FLOTATION TEST REPORT

Sample:	Aitolampi QA2-AE	**Grind:** Mill:	Mild steel
Project:	BF BATCircle2 50404-4021027	Charge:	8 kg rods
Date:	18.8.2022	Water:	0.9 l
Author:	KMS	**Feed**	1.5 kg
Test no.:	**1**	**Screen anal:**	

Remarks:

Primary grinding fineness D80 ~ 86 µm

Feed	Grind	Cond	Reagents (g/t)						Cell	Air	Rotor	pH	Flot	Product	Weight		Grades and Recoveries															
																	C (Leco)		SiO2 (XRF)		Al2O3 (XRF)		MgO (XRF)		CaO (XRF)		Na2O (XRF)		Fe (XRF)		S (Leco)	
	min	min			Na2SiO3 5%	Kerosene 100%	MIBC 100%		l	l/min	rpm		min		g	%	%	Rec%	%	Rec%	%	Rec%	%	Rec%	%	Rec%	%	Rec%	%	Rec%	%	Rec%
35 mm	30																															
									4		1800	8.5																				
		3			500						"	9																				
		2				40	40				"	8.6																				
										3	"	8.1	3	RC1	93.6	9.4	48.10	77.37	23.90	4.07	7.65	5.66	3.04	6.13	1.55	5.71	0.79	3.71	3.34	4.20	1.77	3.55
											"	"																				
		2				30	30				"	8.1																				
										3	"	8.1	4	RC2	36.4	3.6	33.00	20.65	35.60	2.36	10.90	3.14	4.21	3.30	2.24	3.21	1.29	2.36	4.39	2.15	2.50	1.96
											"	"		RC1-2	130.1	13.0	43.87	98.02	27.18	6.43	8.56	8.80	3.37	9.44	1.74	8.92	0.93	6.07	3.63	6.35	1.97	5.51
		2				30	30				"	"																				
										3	"	"	4	RC3	19.9	2.0	2.21	0.75	53.40	1.9	15.50	2.4	5.30	2.3	3.08	2.41	2.33	2.3	7.25	1.9	4.84	2.1
											"	"		RC1-3	149.9	15.0	38.35	98.78	30.65	8.36	9.48	11.24	3.62	11.71	1.92	11.33	1.12	8.39	4.11	8.29	2.35	7.57
		2				20	20				"	"																				
										3	"	8.1	4	RC4	9.5	0.9	1.05	0.17	55.80	0.96	15.40	1.15	5.45	1.11	3.04	1.13	2.35	1.12	7.08	0.90	4.06	0.83
														RC1-4	159.4	16.0	36.13	98.95	32.15	9.32	9.83	12.39	3.73	12.82	1.99	12.46	1.19	9.50	4.29	9.19	2.45	8.40
														Tails	839.4	84.0	0.07	1.05	59.40	90.68	13.20	87.61	4.82	87.18	2.65	87.54	2.15	90.50	8.05	90.81	5.08	91.60
Total	30	11			500	120	120					Total	15	Calc Feed	998.8	100.0	5.83	100.0	55.05	100.0	12.66	100.0	4.65	100.0	2.54	100.0	2.00	100.0	7.45	100.0	4.66	100.0

FLOTATION TEST REPORT

Sample:	Aitolampi QA2-AE	**Grind:** Mill:	Mild steel
Project:	BF BATCircle2 50404-4021027	Charge:	8 kg rods
Date:	24.8.2022	Water:	0.9 l
Author:	KMS	**Feed**	1.5 kg
Test no.:	**2**	**Screen anal:**	

Remarks:

Primary grinding fineness D80 ~ 86 µm
Secondary grinding fineness D80 ~ 104 µm

Feed	Grind min	Cond min	Reagents (g/t)						Cell l	Air l/min	Rotor rpm	pH	Flot min	Product	Weight		Grades and Recoveries															
					Na2SiO3	Kerosene	MIBC										C (Leco)		SiO2 (XRF)		Al2O3 (XRF)		MgO (XRF)		CaO (XRF)		Na2O (XRF)		Fe (XRF)		S (Leco)	
					5%	100%	100%								g	%	%	Rec%	%	Rec%	%	Rec%	%	Rec%	%	Rec%	%	Rec%	%	Rec%	%	Rec%
35 mm	30																															
									4		1800	8.2																				
		3			500						"	9																				
		2				40	40				"	8.6																				
										3	"	8.2	3	RC1																		
											"	"																				
		2				30	30				"	8.1																				
										3	"	8.2	4	RC2																		
											"	"		RC1-2																		
		2				30	30				"	8.1																				
										3	"	8.2	4	RC3																		
											"	"		RC1-3																		
		2				20	20				"	8.1																				
										3	"	8.1	4	RC4																		
														RC1-4	166.7	16.7	36.42	99.16	33.54	10.17	9.97	13.33	3.54	12.77	1.97	13.08	1.38	11.38	4.88	10.70	2.49	9.55
														Tails	831.8	83.3	0.06	0.84	59.40	89.83	13.00	86.67	4.85	87.23	2.63	86.92	2.16	88.62	8.16	89.30	4.73	90.45
RC1-4	10								1.5		1100	8.7																				
		2				20	20				"	"																				
										1.5	"	8.1	7	CC1	87.9	8.8	68.77	98.73	13.68	2.19	4.93	3.47	2.07	3.93	0.92	3.22	0.46	2.01	2.27	2.62	1.07	2.17
														CT1	78.8	7.9	0.33	0.43	55.70	7.98	15.60	9.85	5.19	8.84	3.15	9.86	2.41	9.37	7.79	8.08	4.06	7.37
CC1									1.5		1100	8.2																				
		2				10	10				"	"																				
										1.5	"	8.1	5	CC2	76.2	7.6	78.92	98.22	7.70	1.07	3.15	1.93	1.47	2.42	0.55	1.66	0.20	0.76	1.50	1.50	0.73	1.28
														CT2	11.7	1.2	2.67	0.51	52.60	1.12	16.50	1.55	5.96	1.51	3.34	1.55	2.17	1.25	7.30	1.12	3.31	0.89
CC2									1.5		1100	8.2																				
											"	"																				
										1.5	"	8.1	3	CC3	72.0	7.2	82.50	97.07	6.16	0.81	2.63	1.52	1.26	1.96	0.43	1.23	0.14	0.50	1.31	1.24	0.63	1.05
														CT3	4.2	0.4	17.00	1.16	34.40	0.26	12.20	0.41	5.08	0.46	2.60	0.43	1.27	0.26	4.73	0.26	2.42	0.23
Total	40	15			500	150	150					Total	30	Calc Feed	998.5	100.0	6.13	100.0	55.08	100.0	12.49	100.0	4.63	100.0	2.52	100.0	2.03	100.0	7.61	100.0	4.35	100.0

FLOTATION TEST REPORT

Sample:	Aitolampi QA2-AE	**Grind:** Mill:	Mild steel
Project:	BF BATCircle2 50404-4021027	Charge:	8 kg rods
Date:	27.9.2022	Water:	0.9 l
Author:	KMS	**Feed**	1.5 kg
Test no.:	**3**	**Screen anal:**	

Remarks:

Primary grinding fineness D80 ~ 86 µm
Secondary grinding fineness D80 ~ 89 µm

Feed	Grind min	Cond min	Reagents (g/t)						Cell l	Air l/min	Rotor rpm	pH	Flot min	Product	Weight		Grades and Recoveries															
					Na2SiO3 5%	Kerosene 100%	MIBC 100%										C (Leco)		SiO2 (XRF)		Al2O3 (XRF)		MgO (XRF)		CaO (XRF)		Na2O (XRF)		Fe (XRF)		S (Leco)	
															g	%	%	Rec%	%	Rec%	%	Rec%	%	Rec%	%	Rec%	%	Rec%	%	Rec%	%	Rec%
35 mm	30																															
					LIMS 0.07 T (about 10 % solids)									M1	69.6	7.0	0.19	0.21	1.97	0.25	0.62	0.34	0.22	0.33	0.15	0.32	0.13	0.46	55.20	52.38	37.96	58.80
														NM1	923.5	93.0	6.58	99.79	58.70	99.75	13.63	99.66	5.04	99.67	3.61	99.68	2.11	99.54	3.78	47.62	2.00	41.20
NM1					MIMS 0.3 T (about 10 % solids)									M2	10.4	1.0	1.42	0.24	30.50	0.58	8.93	0.73	2.34	0.52	2.19	0.68	1.74	0.92	28.90	4.10	19.97	4.62
														M1-M2	80.0	8.1	0.35	0.45	5.68	0.84	1.70	1.08	0.50	0.85	0.42	1.00	0.34	1.38	51.78	56.48	35.62	63.42
														NM2	913.1	91.9	6.64	99.55	59.02	99.16	13.69	98.92	5.07	99.15	3.63	99.00	2.12	98.62	3.49	43.52	1.80	36.58
NM2									4		1800	8.1																				
		3			500						"	8.6																				
		2				40	40				"	"																				
										3	"	8.5	3	RC1																	
											"	"																				
		2				30	30				"	"																				
										3	"	8.4	4	RC2																	
											"	"		RC1-2																		
		2				30	30				"	8.4																				
										3	"	8.3	4	RC3																	
											"	"		RC1-3																		
		2				20	20				"	8.3																				
										3	"	8.3	4	RC4																	
														RC1-4	170.0	17.1	35.40	98.81	35.95	11.25	10.58	14.24	3.72	13.55	2.06	10.44	1.46	12.65	4.17	9.67	1.79	6.79
														Tails	743.1	74.8	0.06	0.73	64.30	87.92	14.40	84.69	5.38	85.61	3.99	88.56	2.27	85.97	3.34	33.85	1.80	29.78
RC1-4	20								1.5		1100	8.9																				
		2				20	20				"	"																				
										1.5	"	8.5	7	CC1	82.6	8.3	72.66	98.47	13.00	1.97	4.52	2.95	1.80	3.18	0.84	2.08	0.44	1.86	2.06	2.32	0.83	1.53
														CT1	87.5	8.8	0.24	0.35	57.60	9.27	16.30	11.29	5.53	10.36	3.20	8.36	2.42	10.79	6.16	7.35	2.70	5.26
CC1									1.5		1100	8.3																				
		2				10	10				"	"																				
										1.5	"	8.2	5	CC2	71.8	7.2	83.31	98.19	6.73	0.89	2.72	1.55	1.25	1.92	0.47	1.00	0.17	0.61	1.33	1.30	0.55	0.88
														CT2	10.8	1.1	1.58	0.28	54.90	1.09	16.50	1.40	5.48	1.26	3.37	1.08	2.28	1.25	6.96	1.02	2.74	0.66
CC2									1.5		1100	8.3																				
											"	"																				
										1.5	"	8.1	3	CC3	65.1	6.6	87.37	93.37	4.56	0.55	1.99	1.03	0.94	1.31	0.31	0.60	0.09	0.30	1.04	0.92	0.44	0.63
														CT3	6.7	0.7	43.83	4.82	27.80	0.34	9.83	0.52	4.27	0.61	1.99	0.40	0.90	0.31	4.13	0.38	1.65	0.25
Total	50	15			500	150	150					Total	30	Calc Feed	993.1	100.0	6.13	100.0	54.73	100.0	12.72	100.0	4.70	100.0	3.37	100.0	1.98	100.0	7.38	100.0	4.52	100.0

FLOTATION TEST REPORT

Sample:	Aitolampi QA2-AE	**Grind:** Mill:	Mild steel
Project:	BF BATCircle2 50404-4021027	Charge:	8 kg rods
Date:	9.1.2023	Water:	0.9 l
Author:	KMS	**Feed**	1.5 kg
Test no.:	**4**	**Screen anal:**	

Remarks:

Primary grinding fineness D80 ~ 86 µm
Secondary grinding fineness D80 ~ 67 µm

Feed	Grind min	Cond min	Reagents (g/t)						Cell l	Air l/min	Rotor rpm	pH	Flot min	Product	Weight		Grades and Recoveries															
					Na2SiO3	Kerosene	MIBC										C (Leco)		SiO2 (XRF)		Al2O3 (XRF)		MgO (XRF)		CaO (XRF)		Na2O (XRF)		Fe (XRF)		S (Leco)	
					5%	100%	100%								g	%	%	Rec%	%	Rec%	%	Rec%	%	Rec%	%	Rec%	%	Rec%	%	Rec%	%	Rec%
35 mm	30																															
					MIMS 0.3 T (about 10 % solids)									M1	78.5	7.9	0.31	0.41	5.74	0.81	1.79	1.10	0.50	0.85	0.41	1.27	0.38	1.52	51.70	54.85	35.73	62.97
														NM1	916.1	92.1	6.43	99.59	59.91	99.19	13.75	98.90	5.00	99.15	2.75	98.73	2.11	98.48	3.65	45.15	1.80	37.03
NM1									4		1800	7.7																				
		3			500						"	8.2																				
		2				40	40				"	"																				
										3	"	8.2	3	RC1																	
											"	"																				
		2				30	30				"	8.2																				
										3	"	8.2	4	RC2																	
														RC1-2	145.2	14.6	40.12	98.53	31.80	8.35	9.75	11.12	3.39	10.66	1.86	10.58	1.28	9.43	4.81	9.43	1.70	5.55
														Tails	770.9	77.5	0.08	1.06	65.20	90.84	14.50	87.78	5.30	88.49	2.92	88.15	2.27	89.06	3.43	35.72	1.82	31.49
RC1-2	40								1.5		1100	9																				
		2				20	20				"	"																				
										1.5	"	8.3	7	CC1	76.7	7.7	73.07	94.81	12.70	1.76	3.99	2.41	1.32	2.20	0.80	2.40	0.48	1.86	2.40	2.49	0.79	1.36
														CT1	68.5	6.9	3.21	3.72	53.20	6.59	16.20	8.71	5.70	8.46	3.05	8.18	2.17	7.56	7.50	6.94	2.72	4.18
CC1									1.5		1100	8.2																				
		2				10	10				"	"																				
										1.5	"	8	5	CC2	63.1	6.3	85.94	91.67	5.17	0.59	1.74	0.86	0.62	0.85	0.36	0.88	0.16	0.51	1.35	1.15	0.42	0.60
														CT2	13.7	1.4	13.60	3.14	47.50	1.17	14.40	1.54	4.57	1.35	2.84	1.52	1.95	1.35	7.26	1.34	2.49	0.76
CC2									1.5		1100	7.8																				
											"	"																				
										1.5	"	7.8	4.5	CC3	44.2	4.4	90.10	67.35	3.11	0.25	1.12	0.39	0.43	0.41	0.22	0.38	0.08	0.18	1.00	0.60	0.31	0.31
														CT3	18.9	1.9	76.20	24.32	10.00	0.34	3.20	0.47	1.07	0.44	0.68	0.50	0.34	0.33	2.17	0.55	0.68	0.29
Total	70	11			500	100	100					Total	23.5	Calc Feed	994.7	100.0	5.95	100.0	55.63	100.0	12.80	100.0	4.64	100.0	2.57	100.0	1.98	100.0	7.44	100.0	4.48	100.0

FLOTATION TEST REPORT

Sample:	Aitolampi QA2-AE	**Grind:** Mill:	Mild steel
Project:	BF BATCircle2 50404-4021027	Charge:	8 kg rods
Date:	8-14.3.2023	Water:	0.9 l
Author:	KMS	**Feed**	1.5 kg
Test no.:	**5**	**Screen anal:**	

Remarks:

Primary grinding fineness D80 ~ 86 µm

Secondary grinding fineness D80 ~ 39 µm

Feed	Grind min	Cond min	Reagents (g/t)						Cell l	Air l/min	Rotor rpm	pH	Flot min	Product	Weight		Grades and Recoveries															
					Na2SiO3 5%	Kerosene 100%	MIBC 100%										C (Leco)		SiO2 (XRF)		Al2O3 (XRF)		MgO (XRF)		CaO (XRF)		Na2O (XRF)		Fe (XRF)		S (Leco)	
															g	%	%	Rec%	%	Rec%	%	Rec%	%	Rec%	%	Rec%	%	Rec%	%	Rec%	%	Rec%
35 mm	30																															
					MIMS 0.3 T (about 10 % solids)									M1	78.9	7.9	0.22	0.29	6.51	0.92	1.90	1.20	0.59	1.40	0.51	1.65	0.16	0.56	53.43	55.71	35.70	63.01
														NM1	919.9	92.1	6.46	99.71	60.01	99.08	13.44	98.80	3.54	98.60	2.59	98.35	2.41	99.44	3.64	44.29	1.80	36.99
NM1									4		1800	8																				
		3			750						"	8.9																				
		2				40	40				"	"																				
										3	"	8.7	3	RC1																	
											"	"																				
		2				30	30				"	"																				
										3	"	8.6	4	RC2																	
														RC1-2	152.8	15.3	38.92	99.71	32.31	8.86	9.41	11.49	2.55	11.83	1.91	12.02	1.41	9.70	5.92	11.96	1.58	5.41
														Tails	767.1	76.8	0.00	0.00	65.53	90.22	14.24	87.31	3.73	86.77	2.73	86.33	2.60	89.75	3.19	32.34	1.84	31.58
RC1-2	60								1.5		1100																					
		3			250						"	9.7																				
		2				20	20				"	"																				
										1.5	"	8.4	7	CC1	58.2	5.8	55.76	54.43	22.98	2.40	6.67	3.10	1.75	3.09	1.38	3.31	1.01	2.65	4.72	3.63	1.20	1.56
														CT1	94.6	9.5	28.55	45.28	38.05	6.46	11.09	8.38	3.05	8.74	2.23	8.71	1.66	7.05	6.66	8.33	1.82	3.85
CC1									1.5		1100	8.5																				
		2				10	10				"	"																				
										1.5	"	8.4	5	CC2	34.5	3.5	77.15	44.68	11.06	0.69	3.25	0.90	0.86	0.90	0.70	1.00	0.47	0.73	3.11	1.42	0.71	0.55
														CT2	23.7	2.4	24.55	9.75	40.37	1.72	11.66	2.21	3.06	2.19	2.36	2.30	1.81	1.92	7.07	2.21	1.92	1.02
CC2									1.5		1100	8.4																				
		2				10	10				"	"																				
										1.5	"	8.3	4	CC3	20.6	2.1	87.43	30.18	5.47	0.20	1.68	0.28	0.47	0.29	0.37	0.31	0.23	0.21	2.16	0.59	0.45	0.21
														CT3	14.0	1.4	61.99	14.50	19.32	0.48	5.58	0.62	1.42	0.60	1.20	0.69	0.82	0.51	4.50	0.83	1.08	0.34
CC3									1.5		1100	8.3																				
		2				10	10				"	"																				
										1.5	"	8	4	CC4	19.0	1.9	91.15	29.05	3.54	0.12	1.13	0.17	0.34	0.20	0.25	0.20	0.15	0.12	1.74	0.44	0.36	0.15
														CT4	1.6	0.2	42.74	1.13	28.68	0.08	8.27	0.10	2.03	0.10	1.77	0.12	1.26	0.09	7.21	0.15	1.59	0.06
Total	90	18			1000	120	120					Total	27	Calc Feed	998.8	100.0	5.97	100.0	55.78	100.0	12.53	100.0	3.30	100.0	2.43	100.0	2.23	100.0	7.58	100.0	4.48	100.0

FLOTATION TEST REPORT

Sample:	Aitolampi QA2-AE	**Grind:** Mill:	Mild steel
Project:	BF BATCircle2 50404-4021027	Charge:	8 kg rods
Date:	8-9.5.2023	Water:	0.9 l
Author:	VEJ	**Feed**	1.5 kg
Test no.:	**6**	**Screen anal:**	

Remarks:

Primary grinding fineness D80 ~ 86 µm
Secondary grinding fineness D80 ~ 39 µm

Feed	Grind	Cond	Reagents (g/t)						Cell	Air	Rotor	pH	Flot	Product	Weight		Grades and Recoveries															
																	C (Leco)		SiO2 (XRF)		Al2O3 (XRF)		MgO (XRF)		CaO (XRF)		Na2O (XRF)		Fe (XRF)		S (Leco)	
	min	min			Na2SiO3 5%	Kerosene 100%	MIBC 100%		l	l/min	rpm		min		g	%	%	Rec%	%	Rec%	%	Rec%	%	Rec%	%	Rec%	%	Rec%	%	Rec%	%	Rec%
35 mm	30																															
					MIMS 0.3 T (about 10 % solids)									M1	74.8	7.5	0.27	0.34	7.00	0.94	2.14	1.30	0.82	1.78	0.53	1.53	0.69	2.12	51.39	52.54	36.04	60.61
														NM1	923.3	92.5	6.36	99.66	59.80	99.06	13.21	98.70	3.64	98.22	2.75	98.47	2.59	97.88	3.76	47.46	1.90	39.39
NM1									4		1800	9																				
		3			500						"	9.5																				
		2				40	40				"	"																				
										3	"	9.4	3	RC1																	
											"	"																				
		2				30	30				"	"																				
										3	"	9.4	4	RC2																	
														RC1-2	151.0	15.1	38.61	99.00	32.90	8.91	9.60	11.74	2.41	10.64	1.81	10.62	1.45	8.94	5.91	12.21	1.73	5.87
														Tails	772.3	77.4	0.05	0.66	65.06	90.15	13.91	86.96	3.88	87.58	2.93	87.85	2.81	88.94	3.34	35.25	1.93	33.51
RC1-2	60								1.5		1100	10.4																				
											"	"																				
		2				20	20				"	"																				
										1.5	"	"	7	CC1	81.4	8.2	57.44	79.34	22.40	3.27	6.37	4.19	1.60	3.80	1.26	3.97	0.99	3.29	4.60	5.12	1.27	2.32
														CT1	69.7	7.0	16.62	19.66	45.15	5.64	13.38	7.55	3.36	6.84	2.46	6.65	1.98	5.65	7.45	7.09	2.27	3.56
CC1									1.5		1100	9.4																				
		2				10	10				"	"																				
										1.5	"	9.3	6	CC2	55.5	5.6	75.00	70.69	12.36	1.23	3.55	1.59	0.90	1.46	0.72	1.56	0.52	1.19	3.39	2.57	0.82	1.03
														CT2	25.8	2.6	19.72	8.65	43.97	2.04	12.44	2.60	3.11	2.35	2.40	2.41	1.98	2.10	7.20	2.54	2.22	1.29
CC2									1.5		1100	9.3																				
											"	"																				
										1.5	"	"	5	CC3	36.4	3.6	83.66	51.66	7.38	0.48	2.21	0.65	0.59	0.63	0.45	0.63	0.31	0.46	2.77	1.38	0.60	0.49
														CT3	19.1	1.9	58.55	19.03	21.81	0.75	6.09	0.94	1.49	0.83	1.24	0.92	0.93	0.73	4.57	1.19	1.24	0.53
CC3									1.5		1100	9.2																				
											"	"																				
										1.5	"	"	5	CC4	16.9	1.7	90.12	25.92	4.21	0.13	1.32	0.18	0.38	0.19	0.26	0.17	0.17	0.12	1.76	0.41	0.47	0.18
														CT4	19.4	1.9	78.03	25.74	10.16	0.35	2.98	0.47	0.77	0.44	0.61	0.46	0.43	0.34	3.66	0.97	0.72	0.31
CC4									1.5		1100	9.2																				
											"	"																				
										1.5	"	9.1	5	CC5	4.5	0.5	93.06	7.14	2.75	0.02	0.91	0.03	0.28	0.04	0.18	0.03	0.11	0.02	1.32	0.08	0.37	0.04
														CT5	12.4	1.2	89.05	18.78	4.74	0.11	1.47	0.15	0.41	0.15	0.30	0.14	0.20	0.10	1.92	0.33	0.50	0.14
Total	90	11			500	100	100					Total	35	Calc Feed	998.1	100.0	5.90	100.0	55.84	100.0	12.38	100.0	3.43	100.0	2.58	100.0	2.44	100.0	7.33	100.0	4.46	100.0

FLOTATION TEST REPORT

Sample:	Aitolampi PA1-AE	**Grind:** Mill:	Mild steel
Project:	BF BATCircle2 50404-4021027	Charge:	8 kg rods
Date:	19.8.2022	Water:	0.9 l
Author:	KMS	**Feed**	1.5 kg
Test no.:	**1**	**Screen anal:**	

Remarks:

Primary grinding fineness D80 ~ 79 µm

Feed	Grind	Cond	Reagents (g/t)						Cell	Air	Rotor	pH	Flot	Product	Weight		Grades and Recoveries															
																	C (Leco)		SiO2 (XRF)		Al2O3 (XRF)		MgO (XRF)		CaO (XRF)		Na2O (XRF)		Fe (XRF)		S (Leco)	
	min	min			Na2SiO3 5%	Kerosene 100%	MIBC 100%		l	l/min	rpm		min		g	%	%	Rec%	%	Rec%	%	Rec%	%	Rec%	%	Rec%	%	Rec%	%	Rec%	%	Rec%
35 mm	30																															
									4		1800	8.6																				
		3			500						"	8.9																				
		2				40	40				"	"																				
										3	"	8.2	3	RC1	163.8	16.4	46.60	97.24	26.40	8.63	8.86	12.60	3.60	11.20	2.48	13.33	0.80	8.47	2.94	5.14	1.43	3.85
											"	"																				
		2				30	30				"	"																				
										3	"	"	4	RC2	27.4	2.7	3.93	1.37	52.50	2.87	16.00	3.81	6.11	3.18	4.12	3.71	1.88	3.33	6.11	1.79	3.53	1.60
											"	"		RC1-2	191.2	19.1	40.48	98.62	30.14	11.50	9.88	16.41	3.96	14.39	2.72	17.04	0.95	11.81	3.39	6.93	1.73	5.44
		2				30	30				"	"																				
										3	"	"	4	RC3	15.0	1.5	1.26	0.24	52.30	1.6	15.30	2.0	6.22	1.8	3.92	1.94	1.88	1.8	7.43	1.2	4.84	1.2
											"	"		RC1-3	206.3	20.6	37.62	98.86	31.76	13.07	10.28	18.40	4.12	16.17	2.80	18.98	1.02	13.64	3.69	8.12	1.95	6.64
		2				20	20				"	"																				
										3	"	8.2	4	RC4	9.8	1.0	0.82	0.10	54.30	1.07	15.40	1.32	6.29	1.18	3.93	1.27	1.91	1.22	6.99	0.73	4.22	0.68
														RC1-4	216.1	21.6	35.94	98.96	32.79	14.14	10.51	19.72	4.22	17.34	2.85	20.25	1.06	14.85	3.84	8.85	2.06	7.33
														Tails	783.9	78.4	0.10	1.04	54.90	85.86	11.80	80.28	5.55	82.66	3.10	79.75	1.68	85.15	10.90	91.15	7.17	92.67
Total	30	11			500	120	120					Total	15	Calc Feed	1000.0	100.0	7.85	100.0	50.12	100.0	11.52	100.0	5.26	100.0	3.05	100.0	1.55	100.0	9.37	100.0	6.07	100.0

FLOTATION TEST REPORT

GTK	**Sample:**	Aitolampi PA1-AE	**Grind:**	Mill:	Mild steel
	Project:	BF BATCircle2 50404-4021027		Charge:	8 kg rods
	Date:	25.8.2022		Water:	0.9 l
	Author:	KMS	**Feed**	1.5 kg	
	Test no.:	**2**	**Screen anal:**		

Remarks:

Primary grinding fineness D80 ~ 79 µm
Secondary grinding fineness D80 ~ 89 µm

Feed	Grind	Cond	Reagents (g/t)						Cell	Air	Rotor	pH	Flot	Product	Weight		Grades and Recoveries															
					Na2SiO3	Kerosene	MIBC										C (Leco)		SiO2 (XRF)		Al2O3 (XRF)		MgO (XRF)		CaO (XRF)		Na2O (XRF)		Fe (XRF)		S (Leco)	
	min	min			5%	100%	100%		l	l/min	rpm		min		g	%	%	Rec%	%	Rec%	%	Rec%	%	Rec%	%	Rec%	%	Rec%	%	Rec%	%	Rec%
35 mm	30																															
									4		1800	8.2																				
		3			500						"	8.9																				
		2				40	40				"	"																				
										3	"	8.3	3	RC1																	
											"	"																				
		2				30	30				"	"																				
										3	"	8.3	4	RC2																	
											"	"		RC1-2																	
		2				30	30				"	8.2																				
										3	"	8.2	4	RC3																	
											"	"		RC1-3																	
		2				20	20				"	"																				
										3	"	8.2	4	RC4																	
														RC1-4	210.6	21.1	34.25	98.89	33.06	13.80	10.52	19.22	4.05	16.34	2.83	19.48	1.16	15.68	4.22	9.37	2.00	7.36
														Tails	789.1	78.9	0.10	1.11	55.10	86.20	11.80	80.78	5.54	83.66	3.12	80.52	1.67	84.32	10.90	90.63	6.74	92.64
RC1-4	10								1.5		1100	8.7																				
		2				20	20				"	"																				
										1.5	"	8.3	7	CC1	120.8	12.1	59.33	98.20	17.11	4.10	6.37	6.67	2.83	6.54	1.74	6.87	0.50	3.83	2.15	2.74	0.80	1.67
														CT1	89.9	9.0	0.56	0.69	54.50	9.71	16.10	12.55	5.70	9.80	4.29	12.61	2.06	11.85	7.00	6.63	3.63	5.68
CC1									1.5		1100	8.3																				
		2				10	10				"	"																				
										1.5	"	8.2	5	CC2	106.0	10.6	67.26	97.69	12.18	2.56	4.85	4.46	2.33	4.72	1.32	4.57	0.31	2.08	1.61	1.80	0.57	1.05
														CT2	14.8	1.5	2.51	0.51	52.40	1.54	17.20	2.21	6.41	1.82	4.76	2.30	1.85	1.75	6.03	0.94	2.43	0.63
CC2									1.5		1100	8.3																				
											"	"																				
										1.5	"	8.2	3	CC3	95.7	9.6	72.90	95.58	8.73	1.66	3.63	3.01	1.87	3.42	0.97	3.03	0.19	1.16	1.29	1.30	0.46	0.77
														CT3	10.3	1.0	14.90	2.10	44.20	0.90	16.20	1.45	6.60	1.30	4.56	1.54	1.39	0.92	4.61	0.50	1.56	0.28
Total	40	15			500	150	150					Total	30	Calc Feed	999.7	100.0	7.30	100.0	50.46	100.0	11.53	100.0	5.23	100.0	3.06	100.0	1.56	100.0	9.49	100.0	5.74	100.0

FLOTATION TEST REPORT

Sample:	Aitolampi PA1-AE	**Grind:** Mill:	Mild steel
Project:	BF BATCircle2 50404-4021027	Charge:	8 kg rods
Date:	28-29.9.2022	Water:	0.9 l
Author:	KMS	**Feed**	1.5 kg
Test no.:	**3**	**Screen anal:**	

Remarks:

Primary grinding fineness D80 ~ 79 µm
Secondary grinding fineness D80 ~ 74 µm

Feed	Grind min	Cond min	Reagents (g/t)						Cell l	Air l/min	Rotor rpm	pH	Flot min	Product	Weight		Grades and Recoveries															
					Na2SiO3 5%	Kerosene 100%	MIBC 100%										C (Leco)		SiO2 (XRF)		Al2O3 (XRF)		MgO (XRF)		CaO (XRF)		Na2O (XRF)		Fe (XRF)		S (Leco)	
															g	%	%	Rec%	%	Rec%	%	Rec%	%	Rec%	%	Rec%	%	Rec%	%	Rec%	%	Rec%
35 mm	30																															
					LIMS 0.07 T (about 10 % solids)									M1	111.8	11.2	0.25	0.37	3.02	0.67	0.97	0.93	0.39	0.83	0.2	0.77	0.21	1.55	54.00	65.65	38.1	72.52
														NM1	882.8	88.8	8.59	99.63	56.84	99.33	13.08	99.07	5.90	99.17	3.50	99.23	1.69	98.45	3.58	34.35	1.83	27.48
NM1					MIMS 0.3 T (about 10 % solids)									M2	29.6	3.0	2.76	1.07	45.40	2.66	11.70	2.97	4.25	2.39	3.0	2.89	2.02	3.94	15.80	5.08	10.4	5.23
														M1-M2	141.3	14.2	0.78	1.44	11.88	3.32	3.21	3.90	1.20	3.22	0.81	3.66	0.59	5.48	46.01	70.73	32.31	77.75
														NM2	853.3	85.8	8.79	98.56	57.24	96.68	13.13	96.10	5.96	96.78	3.51	96.34	1.68	94.52	3.15	29.27	1.53	22.25
NM2									4		1800	8																				
		3			500						"	8.7																				
		2				40	40				"	"																				
										3	"	8.6	3	RC1																	
											"	"																				
		2				30	30				"	8.5																				
										3	"	8.5	4	RC2																	
											"	"		RC1-2																		
		2				30	30				"	8.4																				
										3	"	8.4	4	RC3																	
											"	"		RC1-3																		
		2				20	20				"	8.3																				
										3	"	8.3	4	RC4																	
														RC1-4	212.7	21.4	34.91	97.62	35.38	14.90	11.09	20.25	4.16	16.82	3.00	20.53	1.23	17.22	3.28	7.60	1.26	4.58
														Tails	640.5	64.4	0.11	0.94	64.50	81.78	13.80	75.85	6.56	79.96	3.68	75.80	1.83	77.29	3.11	21.67	1.62	17.67
RC1-4	20								1.5		1100	9																				
		2				20	20				"	"																				
										1.5	"	8.5	7	CC1	106.9	10.7	68.96	96.89	14.18	3.00	5.25	4.81	2.34	4.76	1.42	4.88	0.39	2.78	1.80	2.09	0.56	1.03
														CT1	105.8	10.6	0.52	0.72	56.80	11.90	17.00	15.44	5.99	12.06	4.60	15.66	2.07	14.45	4.78	5.50	1.97	3.55
CC1									1.5		1100	8.4																				
		2				10	10				"	"																				
										1.5	"	8.3	5	CC2	93.7	9.4	78.25	96.40	8.71	1.62	3.55	2.86	1.77	3.16	0.95	2.86	0.20	1.21	1.28	1.30	0.39	0.62
														CT2	13.2	1.3	2.82	0.49	53.10	1.38	17.30	1.96	6.40	1.60	4.76	2.02	1.81	1.57	5.53	0.79	1.80	0.40
CC2									1.5		1100	8.4																				
											"	"																				
										1.5	"	8.2	3	CC3	82.7	8.3	83.50	90.79	6.05	0.99	2.59	1.84	1.35	2.13	0.67	1.78	0.12	0.65	0.99	0.89	0.31	0.43
														CT3	11.0	1.1	38.80	5.61	28.70	0.62	10.80	1.02	4.93	1.03	3.05	1.08	0.76	0.55	3.42	0.41	1.02	0.19
Total	50	15			500	150	150					Total	30	Calc Feed	994.6	100.0	7.65	100.0	50.80	100.0	11.72	100.0	5.28	100.0	3.13	100.0	1.52	100.0	9.24	100.0	5.90	100.0

FLOTATION TEST REPORT

Sample:	Aitolampi PA1-AE	**Grind:** Mill:	Mild steel
Project:	BF BATCircle2 50404-4021027	Charge:	8 kg rods
Date:	10.1.2023	Water:	0.9 l
Author:	KMS	**Feed**	1.5 kg
Test no.:	**4**	**Screen anal:**	

Remarks:

Primary grinding fineness D80 ~ 79 µm
Secondary grinding fineness D80 ~ 59 µm

Feed	Grind	Cond	Reagents (g/t)						Cell	Air	Rotor	pH	Flot	Product	Weight		Grades and Recoveries															
																	C (Leco)		SiO2 (XRF)		Al2O3 (XRF)		MgO (XRF)		CaO (XRF)		Na2O (XRF)		Fe (XRF)		S (Leco)	
	min	min			Na2SiO3	Kerosene	MIBC		l	l/min	rpm		min		g	%	%	Rec%	%	Rec%	%	Rec%	%	Rec%	%	Rec%	%	Rec%	%	Rec%	%	Rec%
35 mm	30																															
					MIMS 0.3 T (about 10 % solids)									M1	128.4	12.9	0.52	0.89	7.68	1.93	2.44	2.63	0.79	1.95	0.53	2.17	0.52	4.31	49.60	68.88	34.40	76.41
														NM1	867.9	87.1	8.56	99.11	57.60	98.07	13.34	97.37	5.89	98.05	3.54	97.83	1.71	95.69	3.31	31.12	1.57	23.59
NM1									4		1800	7.9																				
		3			500						"	8.2																				
		2				40	40				"	"																				
										3	"	8.2	3	RC1																	
											"	"																				
		2				30	30				"	8.2																				
										3	"	8.2	4	RC2																		
														RC1-2	192.6	19.3	38.09	97.87	34.12	12.89	11.02	17.85	3.97	14.65	2.93	18.00	1.17	14.54	3.86	8.04	1.05	3.50
														Tails	675.3	67.8	0.14	1.24	64.30	85.18	14.00	79.51	6.44	83.41	3.71	79.83	1.86	81.15	3.16	23.08	1.72	20.09
RC1-2	40								1.5		1100	9.2																				
		2				20	20				"	"																				
										1.5	"	8.4	7	CC1	100.0	10.0	69.58	92.81	14.32	2.81	4.84	4.07	1.87	3.58	1.32	4.19	0.44	2.82	2.18	2.36	0.56	0.97
														CT1	92.6	9.3	4.09	5.05	55.50	10.08	17.70	13.78	6.23	11.06	4.68	13.81	1.96	11.73	5.67	5.68	1.58	2.53
CC1									1.5		1100	8.2																				
		2				10	10				"	"																				
										1.5	"	8.1	5	CC2	82.9	8.3	81.83	90.51	7.05	1.15	2.58	1.80	1.12	1.78	0.71	1.87	0.17	0.91	1.46	1.31	0.37	0.53
														CT2	17.1	1.7	10.10	2.30	49.60	1.66	15.80	2.27	5.50	1.80	4.26	2.32	1.73	1.91	5.67	1.05	1.47	0.43
CC2									1.5		1100	8.1																				
											"	"																				
										1.5	"	7.9	4.5	CC3	61.0	6.1	86.80	70.64	4.48	0.54	1.76	0.90	0.83	0.97	0.46	0.90	0.09	0.35	1.16	0.77	0.30	0.31
														CT3	21.9	2.2	68.00	19.87	14.20	0.61	4.85	0.89	1.93	0.81	1.39	0.97	0.39	0.55	2.30	0.54	0.59	0.22
Total	70	11			500	100	100					Total	23.5	Calc Feed	996.3	100.0	7.52	100.0	51.17	100.0	11.93	100.0	5.23	100.0	3.15	100.0	1.55	100.0	9.28	100.0	5.80	100.0

FLOTATION TEST REPORT

Sample:	Aitolampi PA1-AE	**Grind:** Mill:	Mild steel
Project:	BF BATCircle2 50404-4021027	Charge:	8 kg rods
Date:	8-14.3.2023	Water:	0.9 l
Author:	KMS	**Feed**	1.5 kg
Test no.:	**5**	**Screen anal:**	

Remarks:

Primary grinding fineness D80 ~ 79 µm
Secondary grinding fineness D80 ~ 32 µm

Feed	Grind min	Cond min	Reagents (g/t)						Cell l	Air l/min	Rotor rpm	pH	Flot min	Product	Weight		Grades and Recoveries															
					Na2SiO3	Kerosene	MIBC										C (Leco)		SiO2 (XRF)		Al2O3 (XRF)		MgO (XRF)		CaO (XRF)		Na2O (XRF)		Fe (XRF)		S (Leco)	
					5%	100%	100%								g	%	%	Rec%	%	Rec%	%	Rec%	%	Rec%	%	Rec%	%	Rec%	%	Rec%	%	Rec%
35 mm	30																															
					MIMS 0.3 T (about 10 % solids)									M1	128.6	12.9	0.50	0.86	9.12	2.27	2.86	3.11	1.04	3.50	0.69	2.93	0.89	6.32	48.88	68.12	34.79	76.26
														NM1	871.9	87.1	8.52	99.14	57.82	97.73	13.13	96.89	4.22	96.50	3.39	97.07	1.94	93.68	3.37	31.88	1.60	23.74
NM1									4		1800	8																				
		3			750						"	8.8																				
		2				40	40				"	"																				
										3	"	8.7	3	RC1																	
											"	"																				
		2				30	30				"	8.6																				
										3	"	8.5	4	RC2																	
														RC1-2	197.3	19.7	37.33	98.24	33.80	12.93	10.33	17.24	2.83	14.64	2.80	18.12	1.27	13.83	4.78	10.21	1.11	3.72
														Tails	674.6	67.4	0.10	0.90	64.84	84.80	13.95	79.64	4.63	81.86	3.56	78.95	2.14	79.85	2.96	21.67	1.74	20.01
RC1-2	60								1.5		1100																					
		3			250						"	10																				
		2				20	20				"	"																				
										1.5	"	8,3	7	CC1	119.7	12.0	46.96	74.98	28.22	6.55	8.67	8.78	2.41	7.55	2.35	9.24	1.05	6.93	4.35	5.65	0.98	1.99
														CT1	77.6	7.8	22.48	23.26	42.42	6.38	12.89	8.46	3.49	7.09	3.49	8.89	1.61	6.90	5.43	4.56	1.31	1.73
CC1									1.5		1100	8.4																				
		2				10	10				"	"																				
										1.5	"	8.3	6	CC2	73.6	7.4	62.97	61.82	18.87	2.69	5.91	3.68	1.69	3.27	1.61	3.88	0.68	2.75	3.67	2.93	0.75	0.95
														CT2	46.1	4.6	21.40	13.16	43.14	3.86	13.08	5.10	3.54	4.28	3.53	5.35	1.64	4.18	5.45	2.72	1.33	1.05
CC2									1.5		1100	8.2																				
		2				10	10				"	"																				
										1.5	"	8.2	5	CC3	46.6	4.7	75.60	47.00	11.54	1.04	3.78	1.49	1.15	1.40	1.00	1.54	0.39	1.01	3.06	1.54	0.57	0.45
														CT3	27.0	2.7	41.16	14.82	31.52	1.65	9.60	2.19	2.63	1.86	2.65	2.35	1.16	1.73	4.72	1.38	1.07	0.49
CC3									1.5		1100	8.1																				
		2				10	10				"	"																				
										1.5	"	8.1	5	CC4	37.8	3.8	83.34	42.07	7.17	0.53	2.48	0.79	0.82	0.81	0.64	0.80	0.23	0.47	2.60	1.07	0.45	0.29
														CT4	8.8	0.9	42.18	4.93	30.46	0.52	9.37	0.69	2.60	0.60	2.56	0.74	1.12	0.54	5.04	0.48	1.10	0.16
Total	90	18			1000	120	120					Total	30	Calc Feed	1000.4	100.0	7.49	100.0	51.56	100.0	11.81	100.0	3.81	100.0	3.04	100.0	1.81	100.0	9.22	100.0	5.86	100.0

FLOTATION TEST REPORT

Sample:	Aitolampi PA1-AE	**Grind:** Mill:	Mild steel
Project:	BF BATCircle2 50404-4021027	Charge:	8 kg rods
Date:	10-11.5.2023	Water:	0.9 l
Author:	VEJ	**Feed**	1.5 kg
Test no.:	**6**	**Screen anal:**	

Remarks:

Primary grinding fineness D80 ~ 79 µm
Secondary grinding fineness D80 ~ 32 µm

Feed	Grind min	Cond min	Reagents (g/t)						Cell l	Air l/min	Rotor rpm	pH	Flot min	Product	Weight g	Weight %	C (Leco) %	C (Leco) Rec%	SiO2 (XRF) %	SiO2 (XRF) Rec%	Al2O3 (XRF) %	Al2O3 (XRF) Rec%	MgO (XRF) %	MgO (XRF) Rec%	CaO (XRF) %	CaO (XRF) Rec%	Na2O (XRF) %	Na2O (XRF) Rec%	Fe (XRF) %	Fe (XRF) Rec%	S (Leco) %	S (Leco) Rec%
					Na2SiO3 5%	Kerosene 100%	MIBC 100%																									
35 mm	30																															
					MIMS 0.3 T (about 10 % solids)									M1	163.3	16.4	1.67	3.60	23.07	7.28	5.30	7.50	1.77	7.12	1.45	7.48	1.09	9.33	37.13	69.19	26.56	77.15
														NM1	833.2	83.6	8.77	96.40	57.61	92.72	12.81	92.50	4.53	92.88	3.52	92.52	2.08	90.67	3.24	30.81	1.54	22.85
NM1									4		1800	8																				
		3			500						"	8.6																				
		2				40	40				"	8.5																				
										3	"	8.3	3	RC1																		
											"	8.2																				
		2				30	30				"	"																				
										3	"	8.2	4	RC2																		
														RC1-2	177.2	17.8	40.63	94.93	32.26	11.04	9.92	15.23	2.63	11.48	2.61	14.61	1.21	11.22	4.53	9.16	1.07	3.36
														Tails	656.0	65.8	0.17	1.47	64.46	81.68	13.59	77.27	5.04	81.41	3.76	77.91	2.31	79.45	2.89	21.64	1.67	19.49
RC1-2	60								1.5		1100	9.2																				
		2				20	20				"	"																				
										1.5	"	9.2	7	CC1	109.6	11.0	54.74	79.10	24.10	5.10	7.39	7.02	2.05	5.52	1.99	6.88	0.90	5.15	3.85	4.82	0.86	1.68
														CT1	67.6	6.8	17.76	15.83	45.50	5.94	14.02	8.21	3.58	5.96	3.62	7.73	1.72	6.08	5.63	4.35	1.40	1.68
CC1									1.5		1100	8.2																				
		2				10	10				"	"																				
										1.5	"	8.2	6	CC2	71.6	7.2	71.95	67.97	14.10	1.95	4.46	2.77	1.29	2.27	1.19	2.70	0.50	1.87	2.98	2.44	0.62	0.79
														CT2	38.0	3.8	22.25	11.14	42.95	3.15	12.92	4.25	3.48	3.25	3.49	4.18	1.65	3.28	5.49	2.38	1.31	0.88
CC2									1.5		1100	8.1																				
										1.5	"	8	5	CC3	53.1	5.3	79.44	55.59	9.82	1.01	3.20	1.47	0.96	1.26	0.84	1.41	0.33	0.93	2.55	1.54	0.51	0.48
														CT3	18.6	1.9	50.54	12.38	26.35	0.95	8.05	1.30	2.21	1.01	2.19	1.29	0.97	0.94	4.23	0.90	0.95	0.31
CC3									1.5		1100	8																				
										1.5	"	8	5	CC4	32.0	3.2	86.09	36.38	6.15	0.38	2.12	0.59	0.69	0.55	0.53	0.53	0.20	0.33	2.05	0.75	0.41	0.23
														CT4	21.0	2.1	69.31	19.21	15.42	0.63	4.85	0.88	1.38	0.71	1.33	0.88	0.54	0.60	3.30	0.79	0.66	0.25
CC4									1.5		1100	8.2																				
										1.5	"	8	5	CC5	18.6	1.9	88.70	21.80	4.78	0.17	1.71	0.28	0.58	0.27	0.40	0.24	0.15	0.15	1.81	0.38	0.37	0.12
														CT5	13.4	1.3	82.45	14.57	8.05	0.21	2.70	0.31	0.85	0.28	0.70	0.29	0.27	0.19	2.40	0.37	0.46	0.11
Total	90	11			500	100	100					Total	35	Calc Feed	996.4	100.0	7.61	100.0	51.95	100.0	11.58	100.0	4.08	100.0	3.18	100.0	1.91	100.0	8.79	100.0	5.64	100.0

FLOTATION TEST REPORT

Sample:	Aitolampi ZA5-AE	**Grind:** Mill:	Mild steel
Project:	BF BATCircle2 50404-4021027	Charge:	8 kg rods
Date:	22.8.2022	Water:	0.9 l
Author:	KMS	**Feed**	1.5 kg
Test no.:	**1**	**Screen anal:**	

Remarks:

Primary grinding fineness D80 ~ 85 µm

Feed	Grind	Cond	Reagents (g/t)						Cell	Air	Rotor	pH	Flot	Product	Weight		Grades and Recoveries															
																	C (Leco)		SiO2 (XRF)		Al2O3 (XRF)		MgO (XRF)		CaO (XRF)		Na2O (XRF)		Fe (XRF)		S (Leco)	
	min	min			Na2SiO3 5%	Kerosene 100%	MIBC 100%		l	l/min	rpm		min		g	%	%	Rec%	%	Rec%	%	Rec%	%	Rec%	%	Rec%	%	Rec%	%	Rec%	%	Rec%
35 mm	30																															
									4		1800	8.6																				
		3			500						"	8.9																				
		2				40	40				"	"																				
										3	"	8.1	3	RC1	132.5	13.3	52.10	96.45	23.40	5.89	7.72	8.47	2.86	7.57	2.15	9.93	0.88	6.27	2.34	3.82	1.20	3.21
											"	"																				
		2				30	30				"	"																				
										3	"	"	4	RC2	19.5	2.0	10.20	2.78	49.40	1.83	15.70	2.54	5.51	2.15	4.17	2.84	2.19	2.30	4.76	1.15	2.74	1.08
											"	"		RC1-2	152.0	15.2	46.72	99.23	26.74	7.73	8.74	11.01	3.20	9.72	2.41	12.77	1.05	8.57	2.65	4.97	1.40	4.29
		2				30	30				"	8																				
										3	"	"	4	RC3	12.5	1.2	1.12	0.20	50.90	1.2	15.50	1.6	5.72	1.4	3.83	1.67	2.23	1.5	7.60	1.2	5.38	1.4
											"	"		RC1-3	164.5	16.5	43.26	99.43	28.57	8.94	9.26	12.61	3.39	11.15	2.52	14.43	1.14	10.06	3.03	6.14	1.70	5.65
		2				20	20				"	7.9																				
										3	"	7.9	4	RC4	10.2	1.0	0.54	0.08	54.60	1.05	15.50	1.30	5.82	1.18	3.78	1.34	2.26	1.23	7.12	0.89	4.15	0.85
														RC1-4	174.7	17.5	40.78	99.50	30.08	9.99	9.62	13.92	3.53	12.33	2.59	15.77	1.20	11.30	3.26	7.03	1.84	6.50
														Tails	824.8	82.5	0.04	0.50	57.40	90.01	12.60	86.08	5.32	87.67	2.93	84.23	2.00	88.70	9.14	92.97	5.61	93.50
Total	30	11			500	120	120					Total	15	Calc Feed	999.5	100.0	7.16	100.0	52.63	100.0	12.08	100.0	5.01	100.0	2.87	100.0	1.86	100.0	8.11	100.0	4.95	100.0

FLOTATION TEST REPORT

Sample:	Aitolampi ZA5-AE	**Grind:** Mill:	Mild steel
Project:	BF BATCircle2 50404-4021027	Charge:	8 kg rods
Date:	29.8.2022	Water:	0.9 l
Author:	KMS	**Feed**	1.5 kg
Test no.:	**2**	**Screen anal:**	

Remarks:

Primary grinding fineness D80 ~ 85 µm
Secondary grinding fineness D80 ~ 104 µm

Feed	Grind min	Cond min	Reagents (g/t)						Cell l	Air l/min	Rotor rpm	pH	Flot min	Product	Weight		Grades and Recoveries															
					Na2SiO3	Kerosene	MIBC										C (Leco)		SiO2 (XRF)		Al2O3 (XRF)		MgO (XRF)		CaO (XRF)		Na2O (XRF)		Fe (XRF)		S (Leco)	
					5%	100%	100%								g	%	%	Rec%	%	Rec%	%	Rec%	%	Rec%	%	Rec%	%	Rec%	%	Rec%	%	Rec%
35 mm	30																															
									4		1800	8.4																				
		3			500						"	8.8																				
		2				40	40				"	"																				
										3	"	8.1	3	RC1																	
											"	"																				
		2				30	30				"	8																				
										3	"	8	4	RC2																	
											"	"		RC1-2																	
		2				30	30				"	7.9																				
										3	"	7.9	4	RC3																	
											"	"		RC1-3																	
		2				20	20				"	"																				
										3	"	7.8	4	RC4																	
														RC1-4	177.8	17.8	38.95	99.50	32.02	10.83	10.05	14.60	3.54	12.48	2.65	16.29	1.37	12.92	3.83	8.16	1.95	6.63
														Tails	822.7	82.2	0.04	0.50	57.00	89.17	12.70	85.40	5.37	87.52	2.94	83.71	1.99	87.08	9.32	91.84	5.93	93.37
RC1-4	10								1.5		1100	8.7																				
		2				20	20				"	"																				
										1.5	"	8	7	CC1	99.4	9.9	69.37	99.10	13.91	2.63	5.05	4.10	1.97	3.88	1.39	4.79	0.54	2.87	1.57	1.87	0.78	1.48
														CT1	78.4	7.8	0.36	0.41	55.00	8.20	16.40	10.50	5.54	8.60	4.24	11.50	2.41	10.05	6.70	6.29	3.44	5.16
CC1									1.5		1100	8																				
		2				10	10				"	"																				
										1.5	"	8	5	CC2	88.1	8.8	78.02	98.74	8.80	1.47	3.46	2.49	1.49	2.60	0.95	2.91	0.30	1.43	1.05	1.11	0.58	0.97
														CT2	11.3	1.1	2.17	0.35	53.60	1.16	17.40	1.61	5.68	1.28	4.79	1.88	2.39	1.44	5.61	0.76	2.32	0.50
CC2									1.5		1100	8.1																				
											"	"																				
										1.5	"	8	3	CC3	81.9	8.2	82.60	97.17	6.15	0.96	2.52	1.69	1.15	1.87	0.68	1.93	0.19	0.83	0.85	0.83	0.51	0.80
														CT3	6.2	0.6	17.60	1.57	43.70	0.52	15.80	0.80	5.98	0.74	4.56	0.98	1.82	0.60	3.70	0.28	1.44	0.17
Total	40	15			500	150	150					Total	30	Calc Feed	1000.5	100.0	6.96	100.0	52.56	100.0	12.23	100.0	5.05	100.0	2.89	100.0	1.88	100.0	8.34	100.0	5.22	100.0

FLOTATION TEST REPORT

Sample:	Aitolampi ZA5-AE	**Grind:** Mill:	Mild steel
Project:	BF BATCircle2 50404-4021027	Charge:	8 kg rods
Date:	30.9-3.10.2022	Water:	0.9 l
Author:	KMS	**Feed**	1.5 kg
Test no.:	**3**	**Screen anal:**	

Remarks:

Primary grinding fineness D80 ~ 85 µm

Secondary grinding fineness D80 ~ 86 µm

Feed	Grind min	Cond min	Reagents (g/t)						Cell l	Air l/min	Rotor rpm	pH	Flot min	Product	Weight		Grades and Recoveries															
					Na2SiO3	Kerosene	MIBC										C (Leco)		SiO2 (XRF)		Al2O3 (XRF)		MgO (XRF)		CaO (XRF)		Na2O (XRF)		Fe (XRF)		S (Leco)	
					5%	100%	100%								g	%	%	Rec%	%	Rec%	%	Rec%	%	Rec%	%	Rec%	%	Rec%	%	Rec%	%	Rec%
35 mm	30																															
					LIMS 0.07 T (about 10 % solids)									M1	110.3	11.1	0.25	0.39	3.03	0.63	0.99	0.88	0.39	0.85	0.26	0.99	0.20	1.20	54.00	74.00	37.79	82.36
														NM1	885.6	88.9	7.82	99.61	59.29	99.37	13.90	99.12	5.66	99.15	3.27	99.01	2.06	98.80	2.36	26.00	1.01	17.64
NM1					MIMS 0.3 T (about 10 % solids)									M2	15.5	1.6	1.75	0.39	40.00	1.17	12.30	1.53	4.07	1.25	3.55	1.88	2.27	1.91	18.80	3.61	12.56	3.84
														M1-M2	125.8	12.6	0.43	0.78	7.58	1.80	2.38	2.41	0.84	2.10	0.67	2.87	0.45	3.10	49.67	77.62	34.69	86.20
														NM2	870.1	87.4	7.93	99.22	59.63	98.20	13.93	97.59	5.68	97.90	3.27	97.13	2.05	96.90	2.07	22.38	0.80	13.80
NM2									4		1800	7.5																				
		3			500						"	8.3																				
		2				40	40				"	"																				
										3	"	8.2	3	RC1																	
											"	"																				
		2				30	30				"	8.1																				
										3	"	8.1	4	RC2																	
											"	"		RC1-2																		
		2				30	30				"	8.1																				
										3	"	8	4	RC3																	
											"	"		RC1-3																		
		2				20	20				"	8																				
										3	"	8	4	RC4																	
														RC1-4	180.8	18.1	38.01	98.83	34.59	11.83	10.60	15.43	3.72	13.29	2.76	17.06	1.45	14.21	2.72	6.11	1.00	3.56
														Tails	689.3	69.2	0.04	0.39	66.20	86.36	14.80	82.16	6.20	84.61	3.40	80.07	2.21	82.69	1.90	16.27	0.75	10.24
RC1-4	20								1.5		1100	9																				
		2				20	20				"	9.1																				
										1.5	"	8.4	7	CC1	90.6	9.1	75.36	98.18	11.57	1.98	4.03	2.94	1.52	2.72	1.09	3.38	0.44	2.17	1.25	1.41	0.46	0.83
														CT1	90.2	9.1	0.50	0.65	57.70	9.85	17.20	12.49	5.92	10.57	4.44	13.68	2.46	12.04	4.20	4.71	1.53	2.73
CC1									1.5		1100	8.3																				
		2				10	10				"	"																				
										1.5	"	8.1	5	CC2	80.2	8.1	84.71	97.76	5.99	0.91	2.35	1.52	1.03	1.63	0.62	1.71	0.19	0.83	0.77	0.77	0.33	0.53
														CT2	10.3	1.0	2.80	0.42	54.90	1.07	17.10	1.42	5.33	1.09	4.74	1.67	2.39	1.34	4.96	0.64	1.49	0.30
CC2									1.5		1100	8.3																				
											"	"																				
										1.5	"	8.1	3	CC3	74.0	7.4	88.46	94.21	4.40	0.62	1.81	1.08	0.84	1.23	0.46	1.15	0.12	0.48	0.63	0.58	0.28	0.41
														CT3	6.2	0.6	39.90	3.56	25.00	0.29	8.75	0.44	3.28	0.40	2.61	0.55	1.03	0.35	2.48	0.19	0.92	0.11
Total	50	15			500	150	150					Total	30	Calc Feed	995.9	100.0	6.98	100.0	53.06	100.0	12.47	100.0	5.07	100.0	2.94	100.0	1.85	100.0	8.08	100.0	5.08	100.0

FLOTATION TEST REPORT

Sample:	Aitolampi ZA5-AE	**Grind:** Mill:	Mild steel
Project:	BF BATCircle2 50404-4021027	Charge:	8 kg rods
Date:	4.1.2023	Water:	0.9 l
Author:	KMS	**Feed**	1.5 kg
Test no.:	**4**	**Screen anal:**	

Remarks:

Primary grinding fineness D80 ~ 85 µm
Secondary grinding fineness D80 ~ 69 µm

Feed	Grind min	Cond min	Reagents (g/t)						Cell l	Air l/min	Rotor rpm	pH	Flot min	Product	Weight		Grades and Recoveries															
					Na2SiO3	Kerosene	MIBC										C (Leco)		SiO2 (XRF)		Al2O3 (XRF)		MgO (XRF)		CaO (XRF)		Na2O (XRF)		Fe (XRF)		S (Leco)	
					5%	100%	100%								g	%	%	Rec%	%	Rec%	%	Rec%	%	Rec%	%	Rec%	%	Rec%	%	Rec%	%	Rec%
35 mm	30																															
					MIMS 0.3 T (about 10 % solids)									M1	121.9	12.2	0.35	0.62	5.80	1.34	2.02	2.00	0.71	1.72	0.55	2.30	0.43	2.90	51.10	75.67	36.07	85.54
														NM1	875.6	87.8	7.81	99.38	59.58	98.66	13.79	98.00	5.66	98.28	3.25	97.70	2.00	97.10	2.29	24.33	0.85	14.46
NM1									4		1800	7.8																				
		3			500						"	"																				
		2				40	40				"	"																				
										3	"	7.7	3	RC1																	
											"	"																				
		2				30	30				"	"																				
										3	"	7.7	4	RC2																	
														RC1-2	156.8	15.7	43.27	98.65	30.58	9.07	9.64	12.26	3.23	10.05	2.50	13.42	1.28	11.14	3.37	6.42	0.89	2.71
														Tails	718.8	72.1	0.07	0.73	65.90	89.60	14.70	85.74	6.19	88.23	3.42	84.28	2.16	85.96	2.05	17.91	0.84	11.75
RC1-2	40								1.5		1100	9																				
		2				20	20				"	"																				
										1.5	"	8.2	7	CC1	88.2	8.8	75.17	96.39	11.74	1.96	3.76	2.69	1.20	2.09	1.03	3.13	0.46	2.25	1.76	1.89	0.47	0.80
														CT1	68.6	6.9	2.26	2.25	54.80	7.11	17.20	9.57	5.85	7.96	4.38	10.30	2.34	8.89	5.44	4.53	1.43	1.91
CC1									1.5		1100	8																				
		2				10	10				"	"																				
										1.5	"	7.9	5	CC2	75.4	7.6	86.51	94.79	5.01	0.71	1.69	1.03	0.59	0.88	0.48	1.25	0.16	0.66	1.08	0.99	0.32	0.47
														CT2	12.8	1.3	8.59	1.60	51.30	1.24	15.90	1.66	4.77	1.21	4.27	1.88	2.24	1.59	5.78	0.90	1.34	0.33
CC2									1.5		1100	7.8																				
											"	"																				
										1.5	"	7.8	4	CC3	61.3	6.1	90.90	80.99	2.94	0.34	1.04	0.52	0.39	0.47	0.29	0.61	0.08	0.27	0.81	0.60	0.27	0.32
														CT3	14.1	1.4	67.40	13.80	14.00	0.37	4.52	0.52	1.45	0.40	1.33	0.64	0.50	0.39	2.24	0.38	0.53	0.15
Total	70	11			500	100	100					Total	23	Calc Feed	997.4	100.0	6.90	100.0	53.01	100.0	12.36	100.0	5.06	100.0	2.92	100.0	1.81	100.0	8.25	100.0	5.15	100.0

FLOTATION TEST REPORT

Sample:	Aitolampi ZA5-AE	**Grind:** Mill:	Mild steel
Project:	BF BATCircle2 50404-4021027	Charge:	8 kg rods
Date:	8-15.3.2023	Water:	0.9 l
Author:	KMS	**Feed**	1.5 kg
Test no.:	**5**	**Screen anal:**	

Remarks:

Primary grinding fineness D80 ~ 85 µm

Secondary grinding fineness D80 ~ 40 µm

Feed	Grind	Cond	Reagents (g/t)						Cell	Air	Rotor	pH	Flot	Product	Weight		Grades and Recoveries															
																	C (Leco)		SiO2 (XRF)		Al2O3 (XRF)		MgO (XRF)		CaO (XRF)		Na2O (XRF)		Fe (XRF)		S (Leco)	
	min	min			Na2SiO3	Kerosene	MIBC		l	l/min	rpm		min		g	%	%	Rec%	%	Rec%	%	Rec%	%	Rec%	%	Rec%	%	Rec%	%	Rec%	%	Rec%
3.35 mm	30																															
					MIMS 0.3 T (about 10 % solids)									M1	121.6	12.1	0.23	0.41	7.39	1.67	2.46	2.41	0.92	3.02	0.73	3.11	0.78	4.45	51.45	75.08	34.92	86.03
														NM1	879.8	87.9	7.75	99.59	60.09	98.33	13.75	97.59	4.08	96.98	3.13	96.89	2.33	95.55	2.36	24.92	0.78	13.97
NM1									4		1800	7.4																				
		3			750						"	8.3																				
		2				40	40				"	"																				
										3	"	8.1	3	RC1																	
											"	"																				
		2				30	30				"	"																				
										3	"	8.1	4	RC2																	
														RC1-2	162.8	16.3	41.86	99.49	32.03	9.69	9.66	12.68	2.45	10.76	2.49	14.29	1.45	11.01	4.17	8.15	0.85	2.79
														Tails	717.1	71.6	0.01	0.10	66.46	88.63	14.68	84.91	4.45	86.22	3.27	82.60	2.53	84.54	1.95	16.77	0.77	11.18
RC1-2	60								1.5		1100																					
		3			250						"	9.7																				
		2				20	20				"	"																				
										1.5	"	8.2	7	CC1	101.1	10.1	54.27	80.14	24.83	4.67	7.56	6.16	1.86	5.07	1.96	6.97	1.12	5.29	3.59	4.35	0.71	1.45
														CT1	61.6	6.2	21.50	19.35	43.84	5.02	13.10	6.51	3.42	5.69	3.38	7.32	1.99	5.72	5.13	3.79	1.07	1.34
CC1									1.5		1100	8.3																				
		2				10	10				"	"																				
										1.5	"	8.2	6	CC2	67.2	6.7	71.24	69.96	14.99	1.87	4.52	2.45	1.14	2.06	1.22	2.89	0.66	2.07	2.79	2.25	0.52	0.71
														CT2	33.9	3.4	20.58	10.19	44.34	2.79	13.58	3.71	3.28	3.01	3.42	4.08	2.04	3.22	5.17	2.10	1.08	0.74
CC2									1.5		1100	8.2																				
		2				10	10				"	"																				
										1.5	"	8	5	CC3	49.7	5.0	82.99	60.26	8.20	0.76	2.53	1.02	0.65	0.88	0.69	1.20	0.36	0.83	2.15	1.28	0.41	0.41
														CT3	17.5	1.7	37.90	9.70	34.26	1.12	10.17	1.44	2.51	1.19	2.74	1.69	1.53	1.25	4.60	0.97	0.85	0.30
CC3									1.5		1100	8.1																				
		2				10	10				"	"																				
										1.5	"	8	5	CC4	44.5	4.4	88.90	57.80	4.83	0.40	1.54	0.55	0.42	0.51	0.42	0.66	0.20	0.42	1.79	0.95	0.34	0.31
														CT4	5.2	0.5	32.42	2.46	37.07	0.36	11.01	0.46	2.61	0.37	2.95	0.54	1.69	0.41	5.28	0.33	1.00	0.11
Total	90	18			1000	120	120					Total	30	Calc Feed	1001.4	100.0	6.84	100.0	53.69	100.0	12.38	100.0	3.69	100.0	2.84	100.0	2.14	100.0	8.32	100.0	4.93	100.0

FLOTATION TEST REPORT

Sample:	Aitolampi ZA5-AE	**Grind:** Mill:	Mild steel
Project:	BF BATCircle2 50404-4021027	Charge:	8 kg rods
Date:	16-17.5.2023	Water:	0.9 l
Author:	VEJ	**Feed**	1.5 kg
Test no.:	**6**	**Screen anal:**	

Remarks:

Primary grinding fineness D80 ~ 85 µm
Secondary grinding fineness D80 ~ 40 µm

Feed	Grind min	Cond min	Reagents (g/t)						Cell l	Air l/min	Rotor rpm	pH	Flot min	Product	Weight		Grades and Recoveries															
					Na2SiO3	Kerosene	MIBC										C (Leco)		SiO2 (XRF)		Al2O3 (XRF)		MgO (XRF)		CaO (XRF)		Na2O (XRF)		Fe (XRF)		S (Leco)	
					5%	100%	100%								g	%	%	Rec%	%	Rec%	%	Rec%	%	Rec%	%	Rec%	%	Rec%	%	Rec%	%	Rec%
35 mm	30																															
					MIMS 0.3 T (about 10 % solids)									M1	127.6	12.8	0.63	1.19	10.68	2.56	3.15	3.29	1.15	3.75	0.88	3.76	0.90	5.03	47.68	73.68	33.58	84.14
														NM1	872.8	87.2	7.62	98.81	59.53	97.44	13.54	96.71	4.32	96.25	3.27	96.24	2.48	94.97	2.49	26.32	0.93	15.86
NM1									4		1800	7.4																				
		3			500						"	8.1																				
		2				40	40				"	8																				
										3	"	"	3	RC1																		
											"	"																				
		2				30	30				"	7.9																				
										3	"	7.9	4	RC2																		
														RC1-2	150.7	15.1	43.92	98.27	30.58	8.64	9.39	11.58	2.29	8.83	2.43	12.34	1.40	9.22	4.41	8.05	0.81	2.39
														Tails	722.1	72.2	0.05	0.54	65.57	88.80	14.41	85.13	4.74	87.43	3.45	83.90	2.71	85.74	2.09	18.27	0.95	13.47
RC1-2	60								1.5		1100	8.1																				
											"	"																				
		2				20	20				"	8																				
										1.5	"	8.1	7	CC1	94.7	9.5	58.54	82.28	22.20	3.94	6.72	5.21	1.65	3.98	1.80	5.75	1.01	4.18	3.70	4.24	0.63	1.17
														CT1	56.1	5.6	19.21	15.99	44.72	4.70	13.89	6.37	3.38	4.84	3.49	6.59	2.05	5.04	5.62	3.81	1.11	1.22
CC1									1.5		1100	8																				
		2				10	10				"	"																				
										1.5	"	8.1	6	CC2	67.8	6.8	69.26	69.74	15.94	2.03	4.87	2.70	1.19	2.07	1.32	3.03	0.71	2.11	3.17	2.60	0.52	0.69
														CT2	26.9	2.7	31.46	12.54	38.02	1.91	11.40	2.51	2.79	1.91	3.01	2.72	1.76	2.07	5.03	1.63	0.90	0.47
CC2									1.5		1100	7.6																				
											"	"																				
										1.5	"	8	5	CC3	54.5	5.4	77.09	62.34	11.39	1.16	3.53	1.57	0.87	1.21	0.97	1.78	0.50	1.19	2.76	1.82	0.43	0.46
														CT3	13.4	1.3	37.34	7.40	34.51	0.86	10.34	1.13	2.51	0.86	2.77	1.24	1.58	0.92	4.83	0.78	0.88	0.23
CC3									1.5		1100	8																				
											"	"																				
										1.5	"	8	5	CC4	40.9	4.1	82.43	50.05	8.31	0.64	2.62	0.88	0.66	0.69	0.72	0.99	0.36	0.64	2.46	1.22	0.37	0.30
														CT4	13.6	1.4	61.00	12.29	20.66	0.53	6.25	0.69	1.49	0.52	1.73	0.79	0.92	0.54	3.68	0.60	0.60	0.16
CC4									1.5		1100	8																				
											"	"																				
										1.5	"	8	5	CC5	25.5	2.5	86.52	32.69	6.02	0.29	1.94	0.40	0.52	0.33	0.52	0.45	0.26	0.29	2.17	0.67	0.34	0.17
														CT5	15.5	1.5	75.68	17.36	12.09	0.35	3.74	0.47	0.91	0.36	1.05	0.54	0.53	0.36	2.93	0.55	0.43	0.13
Total	90	11			500	100	100					Total	35	Calc Feed	1000.4	100.0	6.73	100.0	53.30	100.0	12.22	100.0	3.91	100.0	2.97	100.0	2.28	100.0	8.25	100.0	5.09	100.0

FLOTATION TEST REPORT

Sample:	Aitolampi YA4-AE	**Grind:** Mill:	Mild steel
Project:	BF BATCircle2 50404-4021027	Charge:	8 kg rods
Date:	22.8.2022	Water:	0.9 l
Author:	KMS	**Feed**	1.5 kg
Test no.:	**1**	**Screen anal:**	

Remarks:

Primary grinding fineness D80 ~ 95 µm

Feed	Grind	Cond	Reagents (g/t)						Cell	Air	Rotor	pH	Flot	Product	Weight		Grades and Recoveries															
					Na2SiO3	Kerosene	MIBC										C (Leco)		SiO2 (XRF)		Al2O3 (XRF)		MgO (XRF)		CaO (XRF)		Na2O (XRF)		Fe (XRF)		S (Leco)	
	min	min			5%	100%	100%		l	l/min	rpm		min		g	%	%	Rec%	%	Rec%	%	Rec%	%	Rec%	%	Rec%	%	Rec%	%	Rec%	%	Rec%
35 mm	30																															
									4		1800	8.5																				
		3			500						"	8.9																				
		2				40	40				"	"																				
										3	"	8.7	3	RC1	62.4	6.2	42.50	95.16	29.90	3.04	9.03	4.33	2.81	5.01	1.16	3.67	1.33	2.88	3.37	3.24	1.45	2.41
											"	"																				
		2				30	30				"	8.6																				
										3	"	8.7	4	RC2	17.9	1.8	1.26	0.81	60.70	1.77	15.50	2.13	3.68	1.88	2.12	1.92	3.24	2.01	5.58	1.54	2.99	1.43
											"	"		RC1-2	80.3	8.0	33.31	95.97	36.76	4.81	10.47	6.46	3.00	6.89	1.37	5.60	1.76	4.90	3.86	4.79	1.79	3.84
		2				30	30				"	8.6																				
										3	"	8.6	4	RC3	8.8	0.9	0.66	0.21	60.00	0.9	15.50	1.0	3.60	0.9	2.16	0.96	3.26	1.0	6.12	0.8	3.34	0.8
											"	"		RC1-3	89.1	8.9	30.09	96.18	39.06	5.67	10.97	7.50	3.06	7.80	1.45	6.56	1.90	5.89	4.09	5.62	1.95	4.63
		2				20	20				"	8.5																				
										3	"	8.5	4	RC4	8.3	0.8	0.44	0.13	60.90	0.82	15.40	0.98	3.69	0.87	2.19	0.92	3.24	0.93	6.05	0.77	3.11	0.69
														RC1-4	97.3	9.7	27.57	96.31	40.91	6.50	11.34	8.48	3.12	8.67	1.51	7.48	2.02	6.82	4.25	6.39	2.04	5.31
														Tails	902.5	90.3	0.11	3.69	63.50	93.50	13.20	91.52	3.54	91.33	2.02	92.52	2.97	93.18	6.72	93.61	3.93	94.69
Total	30	11			500	120	120					Total	15	Calc Feed	999.8	100.0	2.79	100.0	61.30	100.0	13.02	100.0	3.50	100.0	1.97	100.0	2.88	100.0	6.48	100.0	3.75	100.0

FLOTATION TEST REPORT

Sample:	Aitolampi YA4-AE	**Grind:** Mill:	Mild steel
Project:	BF BATCircle2 50404-4021027	Charge:	8 kg rods
Date:	1.9.2022	Water:	0.9 l
Author:	KMS	**Feed**	1.5 kg
Test no.:	**2**	**Screen anal:**	

Remarks:

Primary grinding fineness D80 ~ 95 µm
Secondary grinding fineness D80 ~ 93 µm

Feed	Grind	Cond	Reagents (g/t)						Cell	Air	Rotor	pH	Flot	Product	Weight		Grades and Recoveries															
																	C (Leco)		SiO2 (XRF)		Al2O3 (XRF)		MgO (XRF)		CaO (XRF)		Na2O (XRF)		Fe (XRF)		S (Leco)	
	min	min			Na2SiO3 5%	Kerosene 100%	MIBC 100%		l	l/min	rpm		min		g	%	%	Rec%	%	Rec%	%	Rec%	%	Rec%	%	Rec%	%	Rec%	%	Rec%	%	Rec%
35 mm	30																															
									4		1800	8.5																				
		3			500						"	8.9																				
		2				40	40				"	"																				
										3	"	8.6	3	RC1																	
											"	"																				
		2				30	30				"	8.5																				
										3	"	8.6	4	RC2																	
											"	"		RC1-2																		
		2				30	30				"	8.5																				
										3	"	8.5	4	RC3																	
											"	"		RC1-3																		
		2				20	20				"	8.4																				
										3	"	8.4	4	RC4																		
														RC1-4	96.0	9.6	29.36	96.53	40.81	6.40	11.21	8.21	2.99	8.41	1.51	7.25	2.09	6.95	4.97	7.27	1.79	4.89
														Tails	904.2	90.4	0.11	3.47	63.40	93.60	13.30	91.79	3.45	91.59	2.05	92.75	2.97	93.05	6.74	92.73	3.70	95.11
RC1-4	10								1.5		1100	8.7																				
		2				20	20				"	"																				
										1.5	"	8.5	7	CC1	41.3	4.1	67.77	95.80	15.36	1.04	5.38	1.70	2.00	2.42	0.58	1.20	0.64	0.92	2.63	1.65	0.70	0.83
														CT1	54.7	5.5	0.39	0.73	60.00	5.36	15.60	6.52	3.73	5.99	2.21	6.05	3.18	6.03	6.74	5.61	2.61	4.07
CC1									1.5		1100	8.5																				
		2				10	10				"	"																				
										1.5	"	8.4	5	CC2	35.1	3.5	79.28	95.35	8.16	0.47	3.47	0.93	1.59	1.64	0.32	0.56	0.25	0.30	1.84	0.98	0.41	0.41
														CT2	6.2	0.6	2.12	0.45	56.40	0.57	16.30	0.77	4.31	0.78	2.08	0.64	2.89	0.62	7.14	0.67	2.39	0.42
CC2									1.5		1100	8.4																				
											"	"																				
										1.5	"	8.2	3	CC3	30.6	3.1	86.30	90.58	5.84	0.29	2.64	0.62	1.30	1.17	0.21	0.33	0.14	0.15	1.56	0.73	0.31	0.27
														CT3	4.5	0.4	31.20	4.78	24.10	0.18	9.15	0.31	3.60	0.47	1.03	0.23	0.98	0.15	3.77	0.26	1.12	0.14
Total	40	15			500	150	150					Total	30	Calc Feed	1000.1	100.0	2.92	100.0	61.23	100.0	13.10	100.0	3.41	100.0	2.00	100.0	2.89	100.0	6.57	100.0	3.51	100.0

FLOTATION TEST REPORT

Sample:	Aitolampi YA4-AE	**Grind:** Mill:	Mild steel
Project:	BF BATCircle2 50404-4021027	Charge:	8 kg rods
Date:	4-5.10.2022	Water:	0.9 l
Author:	KMS	**Feed**	1.5 kg
Test no.:	**3**	**Screen anal:**	

Remarks:

Primary grinding fineness D80 ~ 95 µm
Secondary grinding fineness D80 ~ 73 µm

Feed	Grind min	Cond min	Reagents (g/t)						Cell l	Air l/min	Rotor rpm	pH	Flot min	Product	Weight		Grades and Recoveries															
					Na2SiO3 5%	Kerosene 100%	MIBC 100%										C (Leco)		SiO2 (XRF)		Al2O3 (XRF)		MgO (XRF)		CaO (XRF)		Na2O (XRF)		Fe (XRF)		S (Leco)	
															g	%	%	Rec%	%	Rec%	%	Rec%	%	Rec%	%	Rec%	%	Rec%	%	Rec%	%	Rec%
35 mm	30																															
					LIMS 0.07 T (about 10 % solids)									M1	57.2	5.8	0.39	0.79	7.35	0.69	1.74	0.76	0.51	0.85	0.24	0.70	0.47	0.94	51.10	46.91	23.73	45.33
														NM1	933.6	94.2	2.98	99.21	65.04	99.31	13.85	99.24	3.66	99.15	2.12	99.30	3.03	99.06	3.54	53.09	1.75	54.67
NM1					MIMS 0.3 T (about 10 % solids)									M2	12.8	1.3	0.74	0.34	25.70	0.54	7.04	0.69	1.40	0.52	1.11	0.71	2.01	0.90	34.50	7.09	24.03	10.27
														M1-M2	70.0	7.1	0.45	1.13	10.70	1.22	2.71	1.45	0.67	1.37	0.40	1.41	0.75	1.84	48.07	54.00	23.78	55.60
														NM2	920.8	92.9	3.01	98.87	65.58	98.78	13.94	98.55	3.69	98.63	2.14	98.59	3.04	98.16	3.11	46.00	1.44	44.40
NM2									4		1800	8.2																				
		3			500						"	8.9																				
		2				40	40				"	"																				
										3	"	8.8	3	RC1																	
											"	"																				
		2				30	30				"	8.8																				
										3	"	8.7	4	RC2																	
											"	"		RC1-2																		
		2				30	30				"	8.7																				
										3	"	8.6	4	RC3																	
											"	"		RC1-3																		
		2				20	20				"	8.6																				
										3	"	8.5	4	RC4																	
														RC1-4	99.8	10.1	27.10	96.59	43.24	7.06	11.81	9.05	3.05	8.83	1.55	7.75	2.21	7.75	4.52	7.24	1.47	4.89
														Tails	821.0	82.9	0.08	2.29	68.30	91.72	14.20	89.49	3.77	89.80	2.21	90.84	3.14	90.40	2.94	38.76	1.44	39.50
RC1-4	20								1.5		1100	8.8																				
		2				20	20				"	"																				
										1.5	"	8.6	7	CC1	37.4	3.8	71.75	95.90	13.80	0.84	4.67	1.34	1.65	1.79	0.51	0.95	0.59	0.77	2.32	1.39	0.60	0.75
														CT1	62.4	6.3	0.31	0.69	60.90	6.21	16.10	7.71	3.89	7.04	2.18	6.81	3.19	6.98	5.84	5.85	1.99	4.15
CC1									1.5		1100	8.6																				
		2				10	10				"	"																				
										1.5	"	8.3	5	CC2	31.7	3.2	84.42	95.43	5.96	0.31	2.62	0.64	1.20	1.10	0.21	0.34	0.17	0.19	1.51	0.77	0.34	0.36
														CT2	5.8	0.6	2.26	0.47	56.80	0.54	15.90	0.70	4.10	0.69	2.11	0.61	2.89	0.58	6.76	0.63	1.99	0.38
CC2									1.5		1100	8.3																				
											"	"																				
										1.5	"	8.1	3	CC3	27.7	2.8	88.70	87.60	4.41	0.20	2.05	0.44	1.00	0.80	0.15	0.20	0.10	0.10	1.28	0.57	0.27	0.25
														CT3	4.0	0.4	54.80	7.83	16.70	0.11	6.57	0.20	2.60	0.30	0.66	0.13	0.66	0.09	3.08	0.20	0.83	0.11
Total	50	15			500	150	150					Total	30	Calc Feed	990.8	100.0	2.83	100.0	61.71	100.0	13.15	100.0	3.48	100.0	2.02	100.0	2.88	100.0	6.29	100.0	3.02	100.0

FLOTATION TEST REPORT

Sample:	Aitolampi YA4-AE	**Grind:** Mill:	Mild steel
Project:	BF BATCircle2 50404-4021027	Charge:	8 kg rods
Date:	2-3.1.2023	Water:	0.9 l
Author:	KMS	**Feed**	1.5 kg
Test no.:	**4**	**Screen anal:**	

Remarks:

Primary grinding fineness D80 ~ 95 µm
Secondary grinding fineness D80 ~ 77 µm

Feed	Grind	Cond	Reagents (g/t)						Cell	Air	Rotor	pH	Flot	Product	Weight		Grades and Recoveries															
																	C (Leco)		SiO2 (XRF)		Al2O3 (XRF)		MgO (XRF)		CaO (XRF)		Na2O (XRF)		Fe (XRF)		S (Leco)	
	min	min			Na2SiO3 5%	Kerosene 100%	MIBC 100%		l	l/min	rpm		min		g	%	%	Rec%	%	Rec%	%	Rec%	%	Rec%	%	Rec%	%	Rec%	%	Rec%	%	Rec%
35 mm	30																															
					MIMS 0.3 T (about 10 % solids)									M1	64.7	6.5	0.16	0.37	6.42	0.67	1.87	0.92	0.40	0.77	0.26	0.84	0.55	1.23	51.70	52.24	35.04	63.54
														NM1	934.1	93.5	3.02	99.63	65.57	99.33	13.98	99.08	3.56	99.23	2.14	99.16	3.05	98.77	3.27	47.76	1.39	36.46
NM1									4		1800	8.9																				
		3			500						"	8.9																				
		2				40	40				"	8.8																				
										3	"	8.7	3	RC1																	
											"	"																				
		2				30	30				"	"																				
										3	"	8.5	4	RC2																		
														RC1-2	75.2	7.5	35.87	95.32	35.57	4.34	10.28	5.87	2.82	6.32	1.26	4.69	1.84	4.80	6.26	7.36	1.30	2.74
														Tails	858.9	86.0	0.14	4.31	68.20	94.99	14.30	93.21	3.63	92.91	2.22	94.47	3.16	93.97	3.01	40.40	1.40	33.72
RC1-2	40								1.5		1100	8.8																				
		2				20	20				"	"																				
										1.5	"	8.6	7	CC1	32.0	3.2	82.77	93.40	9.12	0.47	2.80	0.68	0.77	0.74	0.32	0.51	0.43	0.47	1.99	0.99	0.46	0.41
														CT1	43.3	4.3	1.26	1.93	55.10	3.87	15.80	5.19	4.33	5.59	1.95	4.18	2.89	4.33	9.41	6.37	1.92	2.33
CC1									1.5		1100	8.5																				
		2				10	10				"	"																				
										1.5	"	8.3	5	CC2	27.2	2.7	94.96	91.29	2.43	0.11	0.94	0.19	0.37	0.30	0.08	0.11	0.08	0.08	0.68	0.29	0.23	0.17
														CT2	4.7	0.5	12.60	2.10	47.60	0.37	13.50	0.48	3.07	0.43	1.69	0.40	2.40	0.39	9.48	0.70	1.76	0.23
CC2									1.5		1100	7.8																				
											"	"																				
										1.5	"	7.9	4	CC3	19.0	1.9	96.30	64.48	1.77	0.05	0.72	0.10	0.31	0.18	0.06	0.06	0.04	0.03	0.56	0.17	0.21	0.11
														CT3	8.3	0.8	91.90	26.81	3.95	0.05	1.44	0.09	0.52	0.13	0.14	0.06	0.18	0.05	0.97	0.13	0.27	0.06
Total	70	11			500	100	100					Total	23	Calc Feed	998.8	100.0	2.83	100.0	61.74	100.0	13.19	100.0	3.36	100.0	2.02	100.0	2.89	100.0	6.41	100.0	3.57	100.0

12. APPENDIX 4: CHEMICAL ANALYSES, FLOTATION TESTS.

Crs laboratories
REPORT OF XRF-ANALYSES 18.8.2022

Customer : GTK Tero Korhonen
Order : ID 107245
Method : 180X-0
Date : 18.08.22
Comment : BF BatCircle 2.0M 3.1.1-3.1.2 Gra. Ref. Aitolampi

Sample XA3-AE

Contents (%)

	XA3-AE Test 1/RC1 107245-1	XA3-AE Test 1/RC2 107245-2	XA3-AE Test 1/RC3 107245-3	XA3-AE Test 1/RC4 107245-4	XA3-AE Test 1/Tails 107245-5
SiO2	26.2	60.1	60.1	61.1	61.2
TiO2	0.270	0.54	0.52	0.53	0.58
Al2O3	7.63	15.6	15.4	15.0	12.3
Cr2O3	0.0091	0.017	0.017	0.020	0.015
V2O3	0.043	0.076	0.074	0.076	0.064
FeO	2.90	6.43	7.24	7.63	11.1
MnO	0.029	0.051	0.054	0.056	0.043
MgO	2.09	3.70	3.85	3.76	3.54
CaO	1.42	2.90	2.77	2.75	2.31
Rb2O	0.0027	0.0083	0.0085	0.0077	0.0065
SrO	0.013	0.026	0.025	0.025	0.019
BaO	0.029	0.064	0.060	0.059	0.041
Na2O	1.20	3.13	3.06	3.02	2.61
K2O	1.30	2.44	2.30	2.21	1.66
ZrO2	0.016	0.026	0.025	0.025	0.024
P2O5	0.055	0.139	0.151	0.152	0.165
CO2	177.3	8.18	4.88	1.65	0.17
OxSumm	92.30	99.40	99.20	99.20	98.80
Cu	0.012	0.153	0.317	0.269	0.009
Ni	0.008	0.019	0.022	0.022	0.033
Co	0.000	0.004	0.006	0.012	0.005
Zn	0.016	0.039	0.046	0.054	0.054
Pb	0.006	0.009	0.008	0.008	0.005
Ag	0.001	0.001	0.001	0.001	0.001
S	1.09	2.93	3.33	3.37	5.75
As	0.000	0.000	0.000	0.000	0.000
Sb	0.006	0.010	0.010	0.012	0.011
Bi	0.002	0.002	0.002	0.002	0.002
Te	0.000	0.000	0.000	0.003	0.000
Y	0.0020	0.0037	0.0037	0.0030	0.0031
Nb	0.0018	0.0014	0.0014	0.0017	0.0014
Mo	0.034	0.041	0.018	0.010	0.0001
Sn	0.002	0.003	0.003	0.003	0.003
W	0.002	0.001	0.001	0.001	0.000
Cl	0.003	0.007	0.003	0.003	0.005
Th	0.0008	0.0017	0.0019	0.0014	0.0022
U	0.0000	0.0000	0.0000	0.0000	0.0000
Cs	0.002	0.000	0.002	0.002	0.001
La	0.005	0.006	0.005	0.005	0.005
Ce	0.006	0.009	0.007	0.007	0.007
Ta	0.000	0.001	0.000	0.000	0.000
LOI	0.0000	0.0000	0.0000	0.0000	0.0000
Ga	0.0009	0.0019	0.0020	0.0026	0.0015
Si	12.3	28.1	28.1	28.6	28.6
Ti	0.162	0.323	0.313	0.317	0.346
Cr	0.0062	0.012	0.012	0.013	0.010
V	0.029	0.051	0.051	0.052	0.044
Fe	2.25	5.00	5.63	5.94	8.65
Mn	0.022	0.040	0.042	0.044	0.033
Mg	1.26	2.23	2.32	2.27	2.13
Ca	1.02	2.07	1.98	1.96	1.65
Ba	0.026	0.057	0.054	0.052	0.036
C	48.4	2.23	1.33	0.450	0.046
S	1.12	2.54	2.98	2.92	5.20

CRS Laboratories Oy
REPORT OF XRF-ANALYSIS 29.8.2022

Customer : GTK Mintec/Tero Korhonen
Order : ID 108147
Method : 180X-0
Date : 29.08.2022
Comment : BF BATCircle2.0 M 3.1.1-3.1.2 GRA.Ref Aitolampi samples 240822 50404-4021027

Sample XA3-AE

Contents (%)

	XA3-AE Test 2/Tails 108147-1	XA3-AE Test 2/CT1 108147-2	XA3-AE Test 2/CT2 108147-3	XA3-AE Test 2/CT3 108147-4	XA3-AE Test 2/CC3 108147-5
SiO2	61.3	60.4	58.6	35.1	5.23
TiO2	0.58	0.52	0.55	0.429	0.087
Al2O3	12.3	15.5	16.5	11.4	2.02
Cr2O3	0.016	0.019	0.020	0.016	0.0044
V2O3	0.063	0.072	0.082	0.082	0.019
FeO	11.0	8.26	7.11	3.45	0.94
MnO	0.042	0.061	0.070	0.061	0.015
MgO	3.52	3.50	3.85	3.59	0.85
CaO	2.29	2.87	2.98	2.14	0.302
Rb2O	0.0079	0.0083	0.0097	0.0058	0.0000
SrO	0.020	0.026	0.025	0.019	0.0015
BaO	0.044	0.059	0.072	0.057	0.008
Na2O	2.62	3.18	3.10	1.69	0.17
K2O	1.67	2.29	2.76	2.34	0.412
ZrO2	0.024	0.026	0.029	0.018	0.007
P2O5	0.166	0.131	0.120	0.077	0.010
CO2	0.10	0.94	6.70	76.7	324.9
OxSumm	98.80	99.10	99.30	82.20	98.90
Cu	0.007	0.138	0.102	0.028	0.005
Ni	0.033	0.021	0.016	0.007	0.002
Co	0.010	0.007	0.011	0.002	0.001
Zn	0.052	0.043	0.036	0.015	0.004
Pb	0.005	0.007	0.010	0.011	0.007
Ag	0.001	0.001	0.002	0.001	0.001
S	5.73	3.18	2.25	1.12	0.270
As	0.000	0.000	0.000	0.000	0.000
Sb	0.011	0.010	0.012	0.002	0.002
Bi	0.002	0.002	0.003	0.002	0.001
Te	0.000	0.000	0.001	0.000	0.001
Y	0.0029	0.0041	0.0051	0.0034	0.0019
Nb	0.0008	0.0013	0.0018	0.0028	0.0014
Mo	0.0000	0.014	0.073	0.113	0.028
Sn	0.003	0.003	0.003	0.001	0.001
W	0.001	0.001	0.000	0.001	0.000
Cl	0.007	0.005	0.003	0.005	0.003
Th	0.0016	0.0026	0.0016	0.0018	0.0014
U	0.0000	0.0000	0.0000	0.0000	0.0000
Cs	0.003	0.002	0.002	0.001	0.001
La	0.006	0.005	0.008	0.006	0.002
Ce	0.007	0.008	0.009	0.008	0.003
Ta	0.002	0.001	0.002	0.000	0.001
LOI	0.0000	0.0000	0.0000	0.0000	0.0000
Ga	0.0017	0.0018	0.0020	0.0009	0.0004
Si	28.7	28.2	27.4	16.4	2.44
Ti	0.347	0.313	0.331	0.257	0.052
Cr	0.011	0.013	0.014	0.011	0.0030
V	0.043	0.049	0.056	0.056	0.013
Fe	8.59	6.42	5.53	2.68	0.73
Mn	0.033	0.047	0.055	0.048	0.012
Mg	2.12	2.11	2.32	2.17	0.51
Ca	1.64	2.05	2.13	1.53	0.216
Ba	0.040	0.052	0.065	0.051	0.007
C	0.028	0.255	1.83	20.9	88.6
S	5.3216	2.8140	2.0214	0.9688	0.24269

Crs laboratories
REPORT OF XRF-ANALYSES 27.9.2022

Customer : Gtk Tero Korhonen
Order : ID 110931
Method : 180X-0
Date : 27.09.22
Comment : BF BatCircle 2.0M 3.1.1-3.1.2 Gra. Ref. Aitolampi samples

Sample XA3-AE

Contents (%)

	XA3-AE Test 3/Tails 110931-1	XA3-AE Test 3/CT1 110931-2	XA3-AE Test 3/CT2 110931-3	XA3-AE Test 3/CT3 110931-4	XA3-AE Test 3/CC3 110931-5	XA3-AE Test 3/M1 110931-6	XA3-AE Test 3/M2 110931-7
SiO2	70.1	62.6	59.3	20.9	3.22	7.17	44.6
TiO2	0.67	0.58	0.60	0.294	0.059	0.053	0.412
Al2O3	14.0	16.6	16.6	6.66	1.30	1.64	10.3
Cr2O3	0.020	0.022	0.023	0.012	0.0032	0.0077	0.016
V2O3	0.074	0.081	0.085	0.053	0.013	0.0081	0.042
FeO	2.46	5.32	5.77	2.57	0.67	65.4	25.4
MnO	0.044	0.074	0.082	0.046	0.012	0.013	0.037
MgO	3.98	3.76	3.83	2.09	0.59	0.42	2.14
CaO	2.63	3.08	3.06	1.23	0.169	0.286	1.95
Rb2O	0.0057	0.0081	0.0091	0.0025	0.0015	0.011	0.0071
SrO	0.023	0.027	0.026	0.010	0.0005	0.0000	0.015
BaO	0.051	0.072	0.072	0.030	0.005	0.008	0.036
Na2O	2.85	3.30	3.06	0.98	0.09	0.42	2.54
K2O	1.92	2.56	2.74	1.31	0.262	0.170	1.22
ZrO2	0.026	0.028	0.029	0.013	0.005	0.007	0.022
P2O5	0.192	0.128	0.123	0.042	0.006	0.015	0.105
CO2	0.12	0.86	10.5	185.1	345.6	1.93	5.65
OxSumm	99.70	99.40	99.40	87.30	100.90	92.80	97.30
Cu	0.014	0.156	0.154	0.047	0.006	0.023	0.031
Ni	0.009	0.010	0.011	0.006	0.002	0.204	0.086
Co	0.009	0.012	0.022	0.001	0.002	0.019	0.012
Zn	0.053	0.099	0.095	0.027	0.004	0.011	0.046
Pb	0.006	0.007	0.010	0.009	0.007	0.000	0.004
Ag	0.001	0.001	0.001	0.001	0.000	0.003	0.002
S	0.79	1.09	1.16	0.69	0.298	32.6	13.5
As	0.000	0.000	0.000	0.000	0.000	0.000	0.000
Sb	0.010	0.011	0.011	0.002	0.001	0.006	0.009
Bi	0.002	0.003	0.002	0.002	0.001	0.002	0.002
Te	0.001	0.000	0.002	0.000	0.002	0.000	0.000
Y	0.0034	0.0045	0.0049	0.0024	0.0013	0.0005	0.0031
Nb	0.0021	0.0015	0.0018	0.0025	0.0014	0.0000	0.0000
Mo	0.0010	0.020	0.082	0.102	0.022	0.0000	0.0004
Sn	0.002	0.003	0.003	0.000	0.001	0.001	0.001
W	0.001	0.000	0.001	0.000	0.001	0.001	0.000
Cl	0.005	0.003	0.006	0.004	0.003	0.007	0.005
Th	0.0012	0.0018	0.0017	0.0006	0.0013	0.0025	0.0022
U	0.0000	0.0000	0.0000	0.0000	0.0000	0.0088	0.0010
Cs	0.002	0.003	0.002	0.001	0.001	0.007	0.003
La	0.006	0.005	0.009	0.003	0.002	0.001	0.005
Ce	0.008	0.011	0.010	0.006	0.002	0.002	0.009
Ta	0.001	0.000	0.001	0.000	0.001	0.005	0.000
LOI	0.0000	0.0000	0.0000	0.0000	0.0000	0.0000	0.0000
Ga	0.0017	0.0019	0.0023	0.0014	0.0004	0.0012	0.0023
Si	32.8	29.2	27.7	9.77	1.50	3.35	20.8
Ti	0.400	0.349	0.362	0.176	0.036	0.032	0.247
Cr	0.014	0.015	0.016	0.0079	0.0022	0.0053	0.011
V	0.050	0.055	0.058	0.036	0.0090	0.0055	0.029
Fe	1.91	4.14	4.49	2.00	0.52	50.9	19.7
Mn	0.034	0.058	0.064	0.035	0.009	0.010	0.028
Mg	2.40	2.27	2.31	1.26	0.35	0.26	1.29
Ca	1.88	2.20	2.19	0.88	0.121	0.204	1.39
Ba	0.045	0.064	0.065	0.027	0.005	0.007	0.032
C	0.031	0.234	2.87	50.5	94.3	0.53	1.54
S	0.709	1.00	1.02	0.641	0.261	35.65	14.07

Crs laboratories
REPORT OF XRF-ANALYSES 15.2.2023

Customer : Gtk Tero Korhonen
Order : ID 116821
Method : 180X-0
Date : 15.2.2023
Comment : BF BatCircle Aitolampi 21.12.2022
Sample XA3-AE

Contents (%)

	XA3-AE Test 4/Tails 116821-1	XA3-AE Test 4/CT1 116821-2	XA3-AE Test 4/CT2 116821-3	XA3-AE Test 4/CT3 116821-4	XA3-AE Test 4/CC3 116821-5	XA3-AE Test 4/M1 116821-6
SiO2	69.7	52.6	45.7	3.70	1.64	6.07
TiO2	0.66	0.52	0.428	0.051	0.027	0.042
Al2O3	14.2	14.9	12.5	1.10	0.55	1.80
Cr2O3	0.017	0.050	0.055	0.0056	0.0031	0.0094
V2O3	0.073	0.075	0.058	0.0079	0.0046	0.0084
FeO	2.55	8.75	10.2	1.11	0.67	66.4
MnO	0.045	0.089	0.087	0.010	0.006	0.022
MgO	3.92	3.65	2.40	0.29	0.17	0.38
CaO	2.68	2.69	2.45	0.215	0.096	0.303
Rb2O	0.0071	0.0091	0.0000	0.0007	0.0003	0.012
SrO	0.023	0.024	0.019	0.0000	0.0000	0.0000
BaO	0.051	0.060	0.053	0.006	0.003	0.010
Na2O	2.93	2.69	2.34	0.14	0.05	0.53
K2O	1.95	2.34	1.94	0.182	0.090	0.163
ZrO2	0.027	0.028	0.020	0.002	0.001	0.004
P2O5	0.208	0.138	0.136	0.014	0.009	0.007
CO2	0.12	35.4	59.6	336.7	349.0	1.11
OxSumm	99.70	99.00	95.40	98.90	98.70	92.70
Cu	0.009	0.107	0.100	0.010	0.004	0.022
Ni	0.008	0.014	0.019	0.003	0.002	0.212
Co	0.012	0.012	0.005	0.006	0.005	0.018
Zn	0.058	0.036	0.034	0.004	0.002	0.013
Pb	0.006	0.007	0.020	0.008	0.006	0.000
Ag	0.001	0.002	0.001	0.000	0.000	0.003
S	0.83	1.01	0.91	0.257	0.241	32.6
As	0.000	0.000	0.000	0.000	0.000	0.001
Sb	0.010	0.011	0.004	0.000	0.000	0.008
Bi	0.002	0.002	0.004	0.002	0.002	0.003
Te	0.001	0.000	0.001	0.002	0.002	0.000
Y	0.0029	0.0036	0.0023	0.0010	0.0005	0.0001
Nb	0.0018	0.0017	0.0057	0.0012	0.0009	0.0000
Mo	0.0011	0.047	0.043	0.010	0.0058	0.0000
Sn	0.003	0.003	0.004	0.000	0.000	0.001
W	0.000	0.000	0.001	0.000	0.001	0.000
Cl	0.005	0.005	0.006	0.003	0.003	0.002
Th	0.0019	0.0024	0.0010	0.0014	0.0008	0.0029
U	0.0000	0.0000	0.0000	0.0000	0.0000	0.0086
Cs	0.002	0.000	0.001	0.001	0.001	0.001
La	0.006	0.008	0.006	0.002	0.001	0.002
Ce	0.007	0.009	0.010	0.001	0.001	0.000
Ta	0.003	0.002	0.002	0.001	0.000	0.006
LOI	0.0000	0.0000	0.0000	0.0000	0.0000	0.0000
Ga	0.0012	0.0015	0.0022	0.0003	0.0003	0.0015
Si	32.6	24.6	21.4	1.73	0.77	2.84
Ti	0.396	0.310	0.256	0.031	0.016	0.025
Cr	0.012	0.034	0.038	0.0038	0.0021	0.0064
V	0.050	0.051	0.039	0.0054	0.0031	0.0057
Fe	1.98	6.81	7.92	0.86	0.52	51.6
Mn	0.035	0.069	0.067	0.007	0.005	0.017
Mg	2.37	2.20	1.45	0.18	0.10	0.23
Ca	1.92	1.92	1.75	0.153	0.069	0.216
Ba	0.046	0.054	0.047	0.005	0.003	0.009
C	0.033	9.65	16.2	91.8	95.2	0.303
S	0.75	0.90	0.87	0.22	0.19	36.10

CRS Laboratories Oy
REPORT OF XRF-ANALYSIS 22.8.2022

Customer : GTK Mintec/Tero Korhonen
Order : ID 107700
Method : 180X-0
Date : 22.08.2022
Comment : BF BATCircle2.0 M 3.1.1-3.1.2 GRA.Ref Aitolampi samples 190822 50404-4021027

Sample QA2-AE

Contents (%)

	QA2-AE Test 1/RC1 107700-1	QA2-AE Test 1/RC2 107700-2	QA2-AE Test 1/RC3 107700-3	QA2-AE Test 1/RC4 107700-4	QA2-AE Test 1/Tails 107700-5
SiO2	23.9	35.6	53.4	55.8	59.4
TiO2	0.317	0.439	0.57	0.59	0.62
Al2O3	7.65	10.9	15.5	15.4	13.2
Cr2O3	0.014	0.023	0.028	0.029	0.027
V2O3	0.090	0.124	0.151	0.159	0.145
FeO	4.29	5.65	9.33	9.10	10.4
MnO	0.033	0.047	0.056	0.060	0.050
MgO	3.04	4.21	5.30	5.45	4.82
CaO	1.55	2.24	3.08	3.04	2.65
Rb2O	0.0031	0.0060	0.011	0.011	0.0090
SrO	0.010	0.015	0.020	0.021	0.019
BaO	0.031	0.045	0.070	0.067	0.052
Na2O	0.79	1.29	2.33	2.35	2.15
K2O	1.31	1.86	2.55	2.51	2.11
ZrO2	0.018	0.022	0.026	0.027	0.026
P2O5	0.061	0.084	0.122	0.136	0.161
CO2	176.6	121.1	8.11	3.86	0.27
OxSumm	92.30	97.20	99.00	99.00	98.80
Cu	0.028	0.066	1.08	0.387	0.018
Ni	0.016	0.020	0.033	0.036	0.043
Co	0.000	0.000	0.006	0.008	0.006
Zn	0.056	0.076	0.153	0.214	0.182
Pb	0.007	0.008	0.007	0.008	0.006
Ag	0.001	0.001	0.002	0.003	0.002
S	1.52	2.31	5.06	4.43	5.23
As	0.000	0.000	0.000	0.000	0.000
Sb	0.009	0.011	0.010	0.013	0.011
Bi	0.002	0.003	0.002	0.003	0.003
Te	0.002	0.001	0.000	0.000	0.000
Y	0.0025	0.0037	0.0044	0.0047	0.0039
Nb	0.0020	0.0020	0.0010	0.0017	0.0009
Mo	0.051	0.101	0.072	0.035	0.0014
Sn	0.002	0.003	0.002	0.004	0.003
W	0.011	0.003	0.000	0.000	0.001
Cl	0.005	0.006	0.005	0.008	0.006
Th	0.0010	0.0012	0.0017	0.0019	0.0009
U	0.0000	0.0000	0.0000	0.0000	0.0000
Cs	0.001	0.001	0.001	0.002	0.001
La	0.005	0.007	0.007	0.006	0.005
Ce	0.006	0.008	0.011	0.010	0.007
Ta	0.001	0.001	0.000	0.000	0.000
LOI	0.0000	0.0000	0.0000	0.0000	0.0000
Ga	0.0011	0.0016	0.0012	0.0025	0.0019
Si	11.2	16.6	25.0	26.1	27.8
Ti	0.190	0.263	0.339	0.354	0.372
Cr	0.0097	0.016	0.019	0.020	0.018
V	0.061	0.084	0.103	0.108	0.099
Fe	3.34	4.39	7.25	7.08	8.05
Mn	0.025	0.036	0.043	0.046	0.039
Mg	1.83	2.54	3.19	3.29	2.91
Ca	1.10	1.60	2.20	2.17	1.89
Ba	0.028	0.040	0.063	0.060	0.046
C	48.1	33.0	2.21	1.05	0.073
S	1.7668	2.5020	4.8367	4.0609	5.0846

CRS Laboratories Oy
REPORT OF XRF-ANALYSIS 29.8.2022

Customer : GTK Mintec/Tero Korhonen
Order : ID 108143
Method : 180X-0
Date : 29.08.2022
Comment : BF BATCircle2.0 M 3.1.1-3.1.2 GRA.Ref Aitolampi samples 240822 50404-4021027

Sample QA2-AE

Contents (%)

	QA2-AE Test 2/Tails 108143-1	QA2-AE Test 2/CT1 108143-2	QA2-AE Test 2/CT2 108143-3	QA2-AE Test 2/CT3 108143-4	QA2-AE Test 2/CC3 108143-5
SiO2	59.4	55.7	52.6	34.4	6.16
TiO2	0.63	0.60	0.61	0.52	0.118
Al2O3	13.0	15.6	16.5	12.2	2.63
Cr2O3	0.030	0.029	0.031	0.029	0.0073
V2O3	0.145	0.154	0.169	0.160	0.041
FeO	10.5	10.0	9.39	6.09	1.68
MnO	0.048	0.068	0.077	0.067	0.019
MgO	4.85	5.19	5.96	5.08	1.26
CaO	2.63	3.15	3.34	2.60	0.431
Rb2O	0.0082	0.0100	0.011	0.0085	0.0000
SrO	0.017	0.020	0.020	0.015	0.0033
BaO	0.053	0.063	0.072	0.055	0.010
Na2O	2.16	2.41	2.17	1.27	0.14
K2O	2.10	2.47	2.79	2.27	0.480
ZrO2	0.025	0.029	0.030	0.023	0.009
P2O5	0.166	0.133	0.117	0.077	0.010
CO2	0.23	1.21	9.79	62.3	302.6
OxSumm	98.80	98.90	99.00	83.40	95.90
Cu	0.017	0.333	0.199	0.076	0.012
Ni	0.042	0.036	0.032	0.018	0.006
Co	0.010	0.011	0.011	0.002	0.001
Zn	0.179	0.140	0.106	0.047	0.009
Pb	0.006	0.008	0.009	0.008	0.007
Ag	0.001	0.001	0.001	0.000	0.001
S	5.31	4.28	3.46	1.96	0.399
As	0.000	0.000	0.000	0.000	0.000
Sb	0.011	0.011	0.009	0.008	0.002
Bi	0.002	0.003	0.002	0.003	0.001
Te	0.000	0.000	0.000	0.002	0.001
Y	0.0041	0.0052	0.0053	0.0042	0.0006
Nb	0.0010	0.0012	0.0015	0.0020	0.0015
Mo	0.0015	0.034	0.140	0.199	0.054
Sn	0.003	0.003	0.002	0.002	0.002
W	0.001	0.001	0.001	0.000	0.001
Cl	0.006	0.006	0.004	0.004	0.002
Th	0.0014	0.0019	0.0026	0.0015	0.0016
U	0.0000	0.0000	0.0000	0.0000	0.0000
Cs	0.000	0.001	0.001	0.002	0.001
La	0.004	0.008	0.009	0.006	0.002
Ce	0.008	0.010	0.011	0.008	0.003
Ta	0.001	0.000	0.000	0.002	0.001
LOI	0.0000	0.0000	0.0000	0.0000	0.0000
Ga	0.0021	0.0022	0.0021	0.0012	0.0006
Si	27.8	26.0	24.6	16.1	2.88
Ti	0.379	0.360	0.365	0.310	0.071
Cr	0.021	0.020	0.021	0.020	0.0050
V	0.099	0.105	0.115	0.109	0.028
Fe	8.16	7.79	7.30	4.73	1.31
Mn	0.037	0.053	0.059	0.052	0.015
Mg	2.92	3.13	3.59	3.07	0.76
Ca	1.88	2.25	2.38	1.86	0.308
Ba	0.048	0.057	0.065	0.049	0.009
C	0.062	0.331	2.67	17.0	82.5
S	4.725	4.064	3.308	2.415	0.6349

CRS Laboratories
REPORT OF XRF-ANALYSES 6.10.2022

Customer : GTK/Tero Korhonen
Order : ID 111159
Method : 180X-0
Date : 06.10.22
Comment : BF BATCircle 2.0 Aitolampi samples 28.9.2022

Sample QA2-AE

Contents (%)

	QA2-AE Test 3/Tails 111159-1	QA2-AE Test 3/CT1 111159-2	QA2-AE Test 3/CT2 111159-3	QA2-AE Test 3/CT3 111159-4	QA2-AE Test 3/CC3 111159-5	QA2-AE Test 3/M1 111159-6	QA2-AE Test 3/M2 111159-7
SiO2	64.3	57.6	54.9	27.8	4.56	1.97	30.5
TiO2	0.69	0.62	0.61	0.455	0.095	0.020	0.308
Al2O3	14.4	16.3	16.5	9.83	1.99	0.62	8.93
Cr2O3	0.031	0.031	0.029	0.024	0.0054	0.0058	0.030
V2O3	0.166	0.162	0.160	0.132	0.031	0.0075	0.073
FeO	4.30	7.92	8.96	5.32	1.34	71.0	37.1
MnO	0.050	0.075	0.083	0.057	0.015	0.027	0.057
MgO	5.38	5.53	5.48	4.27	0.94	0.22	2.34
CaO	3.99	3.20	3.37	1.99	0.309	0.152	2.19
Rb2O	0.0085	0.011	0.0096	0.0048	0.0020	0.014	0.010
SrO	0.022	0.021	0.020	0.010	0.0004	0.0000	0.0085
BaO	0.060	0.067	0.069	0.044	0.007	0.005	0.034
Na2O	2.27	2.42	2.28	0.90	0.09	0.13	1.74
K2O	2.37	2.60	2.61	1.78	0.351	0.047	1.06
ZrO2	0.027	0.030	0.031	0.021	0.006	0.004	0.014
P2O5	0.195	0.135	0.121	0.054	0.008	0.005	0.051
CO2	0.22	0.88	5.79	160.7	320.4	0.68	5.21
OxSumm	99.50	99.10	99.00	97.90	97.40	92.20	96.00
Cu	0.009	0.316	0.244	0.099	0.013	0.051	0.089
Ni	0.016	0.022	0.026	0.016	0.005	0.309	0.185
Co	0.000	0.007	0.008	0.002	0.002	0.021	0.011
Zn	0.176	0.204	0.163	0.062	0.009	0.017	0.111
Pb	0.007	0.007	0.009	0.012	0.008	0.000	0.003
Ag	0.001	0.001	0.003	0.002	0.000	0.003	0.001
S	1.77	2.79	2.88	1.63	0.375	34.4	19.2
As	0.000	0.000	0.000	0.000	0.000	0.000	0.000
Sb	0.011	0.011	0.012	0.005	0.001	0.007	0.008
Bi	0.002	0.002	0.002	0.003	0.002	0.004	0.002
Te	0.000	0.000	0.000	0.000	0.002	0.000	0.000
Y	0.0049	0.0049	0.0056	0.0034	0.0014	0.0000	0.0028
Nb	0.0017	0.0015	0.0019	0.0035	0.0015	0.0000	0.0000
Mo	0.0024	0.034	0.122	0.204	0.044	0.0000	0.0040
Sn	0.003	0.003	0.003	0.002	0.001	0.000	0.001
W	0.025	0.000	0.000	0.001	0.000	0.001	0.001
Cl	0.008	0.006	0.004	0.004	0.003	0.002	0.002
Th	0.0018	0.0025	0.0029	0.0011	0.0014	0.0000	0.0007
U	0.0000	0.0000	0.0000	0.0000	0.0000	0.0094	0.0039
Cs	0.000	0.003	0.002	0.004	0.001	0.002	0.004
La	0.006	0.009	0.007	0.005	0.003	0.002	0.004
Ce	0.009	0.010	0.013	0.007	0.002	0.002	0.007
Ta	0.000	0.000	0.000	0.000	0.001	0.011	0.003
LOI	0.0000	0.0000	0.0000	0.0000	0.0000	0.0000	0.0000
Ga	0.0020	0.0024	0.0017	0.0018	0.0003	0.0002	0.0013
Si	30.1	26.9	25.7	13.0	2.13	0.92	14.2
Ti	0.414	0.370	0.368	0.273	0.057	0.012	0.185
Cr	0.021	0.021	0.020	0.016	0.0037	0.0040	0.021
V	0.113	0.110	0.109	0.090	0.021	0.0051	0.050
Fe	3.34	6.16	6.96	4.13	1.04	55.2	28.9
Mn	0.039	0.058	0.064	0.044	0.011	0.021	0.044
Mg	3.24	3.34	3.31	2.57	0.56	0.13	1.41
Ca	2.85	2.28	2.40	1.42	0.221	0.108	1.56
Ba	0.053	0.060	0.062	0.039	0.006	0.004	0.030
C	0.060	0.241	1.58	43.83	87.37	0.185	1.42
S	1.80	2.70	2.74	1.65	0.435	37.96	19.97

CRS Laboratories
REPORT OF XRF-ANALYSES 27.1.2023

Customer : GTK / Tero Korhonen
Order : ID 117825
Method : 180X-0
Date : 27.1.2023
Comment : BF BATCircle 2.0 QA2-AE Test 4

Sample QA2-AE

Contents (%)

	QA2-AE Test 4/Tails 117825-1	QA2-AE Test 4/CT1 117825-2	QA2-AE Test 4/CT2 117825-3	QA2-AE Test 4/CT3 117825-4	QA2-AE Test 4/CC3 117825-5	QA2-AE Test 4/M1 117825-6
SiO2	65.2	53.2	47.5	10.0	3.11	5.74
TiO2	0.70	0.62	0.53	0.150	0.065	0.060
Al2O3	14.5	16.2	14.4	3.20	1.12	1.79
Cr2O3	0.031	0.048	0.045	0.015	0.0063	0.011
V2O3	0.166	0.167	0.130	0.036	0.015	0.014
FeO	4.42	9.64	9.33	2.79	1.29	66.5
MnO	0.051	0.087	0.078	0.023	0.010	0.032
MgO	5.30	5.70	4.57	1.07	0.43	0.50
CaO	2.92	3.05	2.84	0.68	0.219	0.412
Rb2O	0.0084	0.011	0.0078	0.0000	0.0011	0.012
SrO	0.021	0.020	0.018	0.0052	0.0002	0.0000
BaO	0.054	0.061	0.055	0.016	0.005	0.010
Na2O	2.27	2.17	1.95	0.34	0.08	0.38
K2O	2.35	2.59	2.17	0.50	0.167	0.165
ZrO2	0.028	0.032	0.029	0.008	0.003	0.004
P2O5	0.182	0.118	0.107	0.022	0.007	0.011
CO2	0.30	11.8	49.7	279.4	330.5	1.14
OxSumm	99.50	99.00	99.30	95.70	96.90	92.70
Cu	0.016	0.310	0.258	0.067	0.022	0.060
Ni	0.017	0.022	0.022	0.008	0.005	0.291
Co	0.006	0.011	0.010	0.004	0.002	0.020
Zn	0.187	0.124	0.111	0.027	0.008	0.029
Pb	0.007	0.008	0.008	0.009	0.008	0.000
Ag	0.001	0.002	0.001	0.001	0.001	0.001
S	1.93	2.81	2.50	0.65	0.331	32.4
As	0.000	0.000	0.000	0.000	0.000	0.001
Sb	0.009	0.011	0.011	0.003	0.000	0.008
Bi	0.003	0.003	0.002	0.002	0.001	0.002
Te	0.000	0.000	0.000	0.001	0.001	0.000
Y	0.0038	0.0043	0.0048	0.0004	0.0012	0.0012
Nb	0.0021	0.0016	0.0017	0.0029	0.0014	0.0000
Mo	0.0036	0.062	0.083	0.067	0.043	0.0000
Sn	0.003	0.002	0.003	0.002	0.001	0.000
W	0.000	0.001	0.001	0.000	0.000	0.000
Cl	0.009	0.007	0.005	0.003	0.003	0.000
Th	0.0018	0.0022	0.0023	0.0018	0.0014	0.0000
U	0.0000	0.0000	0.0000	0.0000	0.0000	0.0092
Cs	0.003	0.002	0.001	0.002	0.001	0.003
La	0.005	0.007	0.005	0.002	0.002	0.004
Ce	0.009	0.012	0.009	0.003	0.002	0.004
Ta	0.001	0.001	0.002	0.000	0.001	0.000
LOI	0.0000	0.0000	0.0000	0.0000	0.0000	0.0000
Ga	0.0016	0.0018	0.0014	0.0008	0.0004	0.0000
Si	30.5	24.8	22.2	4.68	1.45	2.68
Ti	0.419	0.371	0.319	0.090	0.039	0.036
Cr	0.021	0.033	0.031	0.010	0.0043	0.0076
V	0.113	0.114	0.088	0.024	0.010	0.0096
Fe	3.43	7.50	7.26	2.17	1.00	51.7
Mn	0.040	0.068	0.060	0.018	0.008	0.025
Mg	3.19	3.44	2.76	0.65	0.26	0.30
Ca	2.09	2.18	2.03	0.484	0.157	0.294
Ba	0.048	0.055	0.049	0.014	0.005	0.009
C	0.081	3.21	13.6	76.2	90.1	0.311
S	1.82	2.72	2.49	0.6820	0.3146	35.73

CRS Laboratories
Thermo performX XRF results

Batch BatCircle QA2-AE Test 5
Method X_UQ_3600W Oxides
Template
Report date 3/23/2023
Client GTK Mintec - Tero Korhonen

Sample Name	Client ID	Al2O3	BaO	CaO	Cr2O3	Fe	Fe2O3	K2O	MgO	Mn	MnO
		(%)	(%)	(%)	(%)	(%)	(%)	(%)	(%)	(%)	(%)
		PP-XRF12	PP-XRF12	PP-XRF12	PP-XRF12	PP-XRF12	PP-XRF12	PP-XRF12	PP-XRF12	PP-XRF12	PP-XRF12
124023-1	QA2-AE Test 5 M1	1.9	< 0.001	0.508	0.0113	53.43		0.252	0.585	0.0307	
124023-2	QA2-AE Test 5 Tails	14.241	0.059	2.727	0.025		4.561	2.607	3.731		0.057
124023-3	QA2-AE Test 5 CT1	11.094	0.042	2.233	0.056		9.527	2.126	3.048		0.094
124023-4	QA2-AE Test 5 CT2	11.66	0.038	2.359	0.06		10.101	2.173	3.056		0.098
124023-5	QA2-AE Test 5 CT3	5.578	0.017	1.203	0.039		6.436	1.031	1.424		0.059
124023-6	QA2-AE Test 5 CT4	8.27	0.099	1.771	0.064		10.306	1.505	2.029		0.091
124023-7	QA2-AE Test 5 CC4	1.129	0.003	0.249	0.016		2.487	0.184	0.341		0.022

Sample Name	Client ID	Na2O	P2O5	Rb2O	SiO2	SrO	TiO2	V2O5	ZrO2	Ag	As
		(%)	(%)	(%)	(%)	(%)	(%)	(%)	(%)	(%)	(%)
		PP-XRF12	PP-XRF12	PP-XRF12	PP-XRF12	PP-XRF12	PP-XRF12	PP-XRF12	PP-XRF12	PP-XRF12	PP-XRF12
124023-1	QA2-AE Test 5 M1	0.157	0.0226	< 0.001	6.51	0.0022	0.0663	0.0228	0.0027	< 0.001	< 0.001
124023-2	QA2-AE Test 5 Tails	2.603	0.171	0.01	65.526	0.021	0.61	0.197	0.027	< 0.001	< 0.001
124023-3	QA2-AE Test 5 CT1	1.658	0.088	0.008	38.052	0.014	0.41	0.164	0.024	< 0.001	0.002
124023-4	QA2-AE Test 5 CT2	1.807	0.093	0.008	40.37	0.015	0.425	0.164	0.025	< 0.001	0.002
124023-5	QA2-AE Test 5 CT3	0.817	0.048	0.004	19.316	0.008	0.221	0.083	0.013	< 0.001	0.001
124023-6	QA2-AE Test 5 CT4	1.262	0.074	0.007	28.684	0.014	0.328	0.122	0.027	< 0.001	0.003
124023-7	QA2-AE Test 5 CC4	0.146	0.015	< 0.001	3.541	0.001	0.054	0.022	0.003	< 0.001	< 0.001

Sample Name	Client ID	Bi	Ce	Cl	Co	Cs	Cu	Dy	Er	Eu	Ga
		(%)	(%)	(%)	(%)	(%)	(%)	(%)	(%)	(%)	(%)
		PP-XRF12	PP-XRF12	PP-XRF12	PP-XRF12	PP-XRF12	PP-XRF12	PP-XRF12	PP-XRF12	PP-XRF12	PP-XRF12
124023-1	QA2-AE Test 5 M1	< 0.001	< 0.001	< 0.001	0.0259	< 0.001	0.0572	< 0.001	< 0.001	< 0.001	0.001
124023-2	QA2-AE Test 5 Tails	< 0.001	0.004	0.003	0.035	0.001	0.016	< 0.001	0.004	< 0.001	0.002
124023-3	QA2-AE Test 5 CT1	< 0.001	0.002	0.003	0.018	< 0.001	0.259	< 0.001	< 0.001	< 0.001	0.002
124023-4	QA2-AE Test 5 CT2	< 0.001	0.004	0.002	0.025	< 0.001	0.27	< 0.001	< 0.001	< 0.001	0.002
124023-5	QA2-AE Test 5 CT3	< 0.001	0.002	0.001	0.01	< 0.001	0.158	< 0.001	< 0.001	< 0.001	< 0.001
124023-6	QA2-AE Test 5 CT4	< 0.001	0.002	0.001	0.004	0.04	0.247	< 0.001	< 0.001	< 0.001	< 0.001
124023-7	QA2-AE Test 5 CC4	< 0.001	0.001	< 0.001	0.007	< 0.001	0.044	< 0.001	< 0.001	< 0.001	< 0.001

Sample Name	Client ID	Gd	Hf	Ho	La	Lu	Mo	Nb	Nd	Ni	Pb
		(%)	(%)	(%)	(%)	(%)	(%)	(%)	(%)	(%)	(%)
		PP-XRF12	PP-XRF12	PP-XRF12	PP-XRF12	PP-XRF12	PP-XRF12	PP-XRF12	PP-XRF12	PP-XRF12	PP-XRF12
124023-1	QA2-AE Test 5 M1	0.0163	< 0.001	< 0.001	< 0.001	< 0.001	0.0033	< 0.001	< 0.001	0.298	< 0.001
124023-2	QA2-AE Test 5 Tails	< 0.001	< 0.001	< 0.001	0.003	< 0.001	0.008	0.002	0.002	0.017	< 0.001
124023-3	QA2-AE Test 5 CT1	0.003	< 0.001	< 0.001	0.004	< 0.001	0.104	0.001	< 0.001	0.024	0.001
124023-4	QA2-AE Test 5 CT2	0.003	< 0.001	< 0.001	0.005	< 0.001	0.108	0.002	0.002	0.027	0.002
124023-5	QA2-AE Test 5 CT3	0.002	< 0.001	< 0.001	0.002	< 0.001	0.107	0.001	< 0.001	0.018	< 0.001
124023-6	QA2-AE Test 5 CT4	0.003	< 0.001	< 0.001	< 0.001	< 0.001	0.231	0.01	0.001	0.031	0.002
124023-7	QA2-AE Test 5 CC4	0.001	< 0.001	< 0.001	0.002	< 0.001	0.05	0.001	< 0.001	0.009	< 0.001

Sample Name	Client ID	Pr	S	Sb	Sm	Sn	Ta	Tb	Te	Th	Tm
		(%)	(%)	(%)	(%)	(%)	(%)	(%)	(%)	(%)	(%)
		PP-XRF12	PP-XRF12	PP-XRF12	PP-XRF12	PP-XRF12	PP-XRF12	PP-XRF12	PP-XRF12	PP-XRF12	PP-XRF12
124023-1	QA2-AE Test 5 M1	< 0.001	< 0.001	< 0.001	< 0.001	< 0.001	< 0.001	< 0.001	< 0.001	< 0.001	< 0.001
124023-2	QA2-AE Test 5 Tails	< 0.001	2.197	< 0.001	< 0.001	< 0.001	< 0.001	< 0.001	< 0.001	< 0.001	< 0.001
124023-3	QA2-AE Test 5 CT1	< 0.001	2.23	< 0.001	< 0.001	< 0.001	< 0.001	0.002	< 0.001	< 0.001	< 0.001
124023-4	QA2-AE Test 5 CT2	< 0.001	2.36	< 0.001	< 0.001	< 0.001	< 0.001	0.002	< 0.001	< 0.001	< 0.001
124023-5	QA2-AE Test 5 CT3	< 0.001	1.305	< 0.001	< 0.001	< 0.001	< 0.001	0.002	< 0.001	< 0.001	< 0.001
124023-6	QA2-AE Test 5 CT4	< 0.001	1.898	< 0.001	< 0.001	< 0.001	< 0.001	0.002	0.002	0.015	< 0.001
124023-7	QA2-AE Test 5 CC4	< 0.001	0.467	< 0.001	0.002	< 0.001	< 0.001	0.003	< 0.001	0.001	< 0.001

Sample Name	Client ID	U	W	Y	Yb	Zn	Sum Before Norm.	Fe*	I	Se	Au
		(%)	(%)	(%)	(%)	(%)	(%)	(%)	(%)	(%)	(%)
		PP-XRF12	PP-XRF12	PP-XRF12	PP-XRF12	PP-XRF12			PP-XRF12	PP-XRF12	PP-XRF12
124023-1	QA2-AE Test 5 M1	< 0.001	0.0553	< 0.001	< 0.001	0.0253	100			0.0402	
124023-2	QA2-AE Test 5 Tails	< 0.001	0.181	0.006	< 0.001	0.21	107.649	3.19	0.003	0.002	
124023-3	QA2-AE Test 5 CT1	< 0.001	0.038	0.005	< 0.001	0.116	103.116	6.664		0.003	
124023-4	QA2-AE Test 5 CT2	< 0.001	0.055	0.005	< 0.001	0.124	103.83	7.065		0.003	
124023-5	QA2-AE Test 5 CT3	< 0.001	0.027	0.003	< 0.001	0.072	99.961	4.502	0.001	0.002	
124023-6	QA2-AE Test 5 CT4	< 0.001	< 0.001	0.006	< 0.001	0.117	100.337	7.209	0.016	0.003	0.001
124023-7	QA2-AE Test 5 CC4	< 0.001	0.03	< 0.001	< 0.001	0.022	99.954	1.74	0.002		

Sample Name	Client ID	Re	Cd	F	Rh	Ru	Sc	Ar	Pt	Eltra C	Leco S
		(%)	(%)	(%)	(%)	(%)	(%)	(%)	(%)	(%)	(%)
		PP-XRF12	PP-XRF12	PP-XRF12	PP-XRF12	PP-XRF12	PP-XRF12	PP-XRF12	PP-XRF12		
124023-1	QA2-AE Test 5 M1								0.0022	0.22	35.7
124023-2	QA2-AE Test 5 Tails	0.002	0.003	0.135						0	1.84
124023-3	QA2-AE Test 5 CT1									28.55	1.82
124023-4	QA2-AE Test 5 CT2									24.55	1.92
124023-5	QA2-AE Test 5 CT3									61.99	1.08
124023-6	QA2-AE Test 5 CT4									42.74	1.59
124023-7	QA2-AE Test 5 CC4									91.15	0.36

CRS Laboratories
Thermo PerformX XRF results

Batch	BF BatCircle 2 Aitolampi QA2-AE Test 6
Method	X_UQ_3600W Oxides, X_UQ_3600W Sulphides
Report date	15.6.2023
Client	GTK / Tero Korhonen
Notes	

Lab ID	Client ID	C	S	Al2O3	BaO	CaO	Cr2O3	Fe	Fe2O3	K2O	MgO	Mn
		(%)	(%)	(%)	(%)	(%)	(%)	(%)	(%)	(%)	(%)	(%)
		CA-C (Eltra)	CA-S (Leco)	PP-XRF12	PP-XRF12	PP-XRF12	PP-XRF12	PP-XRF12	PP-XRF12	PP-XRF12	PP-XRF12	PP-XRF12
128562-1	QA2-AE Test 6/M	0.27	36.04	2.140	< 0.001	0.528	0.013	51.390		0.276	0.816	0.028
128562-2	QA2-AE Test 6/Tails	<0.05	1.93	13.910	0.056	2.930	0.025	3.340	4.770	2.670	3.880	0.047
128562-3	QA2-AE Test 6/CT1	16.62	2.27	13.382	0.046	2.459	0.054	7.448	10.648	2.461	3.357	
128562-4	QA2-AE Test 6/CT2	19.72	2.22	12.435	0.045	2.403	0.051	7.2	10.294	2.304	3.108	
128562-5	QA2-AE Test 6/CT3	58.55	1.24	6.089	0.03	1.243	0.031	4.565	6.526	1.118	1.486	
128562-6	QA2-AE Test 6/CT4	78.03	0.72	2.977	0.011	0.612	0.022	3.66	5.233	0.522	0.772	
128562-7	QA2-AE Test 6/CT5	89.05	0.50	1.472	0.009	0.295	0.019	1.919	2.743	0.243	0.414	
128562-8	QA2-AE Test 6/CC5	93.06	0.37	0.911	0.026	0.177	0.011	1.316	1.881	0.143	0.281	

Lab ID	Client ID	MnO	Na2O	P2O5	Rb2O	SiO2	SrO	TiO2	V2O5	ZrO2	Ag	As
		(%)	(%)	(%)	(%)	(%)	(%)	(%)	(%)	(%)	(%)	(%)
		PP-XRF12	PP-XRF12	PP-XRF12	PP-XRF12	PP-XRF12	PP-XRF12	PP-XRF12	PP-XRF12	PP-XRF12	PP-XRF12	PP-XRF12
128562-1	QA2-AE Test 6/M		0.690	< 0.001	< 0.001	7.000	0.002	0.062	0.019	0.004	0.004	< 0.001
128562-2	QA2-AE Test 6/Tails	0.061	2.810	0.186	0.010	65.060	0.022	0.636	0.198	0.029	< 0.001	< 0.001
128562-3	QA2-AE Test 6/CT1	0.095	1.979	0.091	0.01	45.15	0.016	0.466	0.177	0.027	< 0.001	< 0.001
128562-4	QA2-AE Test 6/CT2	0.091	1.984	0.096	0.009	43.969	0.016	0.445	0.161	0.027	< 0.001	< 0.001
128562-5	QA2-AE Test 6/CT3	0.053	0.934	0.049	0.004	21.812	0.008	0.232	0.079	0.014	< 0.001	< 0.001
128562-6	QA2-AE Test 6/CT4	0.033	0.426	0.027	0.002	10.155	0.003	0.121	0.04	0.007	< 0.001	< 0.001
128562-7	QA2-AE Test 6/CT5	0.02	0.196	0.016	< 0.001	4.737	0.001	0.064	0.021	0.004	< 0.001	< 0.001
128562-8	QA2-AE Test 6/CC5	0.015	0.112	0.014	< 0.001	2.746	0.001	0.037	0.013	0.004	0.002	< 0.001

Lab ID	Client ID	Bi	Ce	Cl	Co	Cs	Cu	Dy	Er	Eu	Ga	Gd
		(%)	(%)	(%)	(%)	(%)	(%)	(%)	(%)	(%)	(%)	(%)
		PP-XRF12	PP-XRF12	PP-XRF12	PP-XRF12	PP-XRF12	PP-XRF12	PP-XRF12	PP-XRF12	PP-XRF12	PP-XRF12	PP-XRF12
128562-1	QA2-AE Test 6/M	< 0.001	< 0.001	0.021	0.057	< 0.001	0.060	< 0.001	< 0.001	< 0.001	< 0.001	0.038
128562-2	QA2-AE Test 6/Tails	< 0.001	0.004	0.003	0.033	< 0.001	0.011	< 0.001	< 0.001	< 0.001	0.001	< 0.001
128562-3	QA2-AE Test 6/CT1	< 0.001	0.004	0.001	0.021	0.005	0.308	< 0.001	0.002	< 0.001	0.001	0.003
128562-4	QA2-AE Test 6/CT2	< 0.001	0.005	0.003	0.018	< 0.001	0.275	< 0.001	< 0.001	< 0.001	0.002	0.003
128562-5	QA2-AE Test 6/CT3	< 0.001	0.003	0.001	0.017	0.003	0.166	< 0.001	< 0.001	< 0.001	< 0.001	0.003
128562-6	QA2-AE Test 6/CT4	< 0.001	0.002	< 0.001	0.012	0.002	0.104	< 0.001	< 0.001	< 0.001	< 0.001	0.002
128562-7	QA2-AE Test 6/CT5	< 0.001	0.001	< 0.001	0.006	0.003	0.062	< 0.001	< 0.001	< 0.001	< 0.001	0.001
128562-8	QA2-AE Test 6/CC5	< 0.001	< 0.001	0.001	0.014	0.014	0.044	< 0.001	< 0.001	< 0.001	< 0.001	< 0.001

Lab ID	Client ID	Hf	Ho	La	Lu	Mo	Nb	Nd	Ni	Pb	Pr	S
		(%)	(%)	(%)	(%)	(%)	(%)	(%)	(%)	(%)	(%)	(%)
		PP-XRF12	PP-XRF12	PP-XRF12	PP-XRF12	PP-XRF12	PP-XRF12	PP-XRF12	PP-XRF12	PP-XRF12	PP-XRF12	PP-XRF12
128562-1	QA2-AE Test 6/M	< 0.001	< 0.001	< 0.001	< 0.001	0.006	< 0.001	< 0.001	0.302	< 0.001	< 0.001	< 0.001
128562-2	QA2-AE Test 6/Tails	< 0.001	< 0.001	0.003	< 0.001	0.005	0.001	0.002	0.016	< 0.001	< 0.001	< 0.001
128562-3	QA2-AE Test 6/CT1	< 0.001	< 0.001	0.002	< 0.001	0.086	0.002	0.002	0.023	0.002	< 0.001	< 0.001
128562-4	QA2-AE Test 6/CT2	< 0.001	< 0.001	0.004	< 0.001	0.095	0.002	0.001	0.023	0.001	< 0.001	< 0.001
128562-5	QA2-AE Test 6/CT3	< 0.001	< 0.001	0.003	< 0.001	0.108	0.003	< 0.001	0.014	0.001	< 0.001	< 0.001
128562-6	QA2-AE Test 6/CT4	< 0.001	< 0.001	0.002	< 0.001	0.085	0.003	< 0.001	0.01	< 0.001	< 0.001	< 0.001
128562-7	QA2-AE Test 6/CT5	< 0.001	< 0.001	0.001	< 0.001	0.07	0.003	< 0.001	0.007	0.001	< 0.001	< 0.001
128562-8	QA2-AE Test 6/CC5	< 0.001	< 0.001	< 0.001	< 0.001	0.075	0.004	< 0.001	0.005	< 0.001	< 0.001	< 0.001

Lab ID	Client ID	Sb	Sm	Sn	Ta	Tb	Te	Th	Tm	U	W	Y
		(%)	(%)	(%)	(%)	(%)	(%)	(%)	(%)	(%)	(%)	(%)
		PP-XRF12	PP-XRF12	PP-XRF12	PP-XRF12	PP-XRF12	PP-XRF12	PP-XRF12	PP-XRF12	PP-XRF12	PP-XRF12	PP-XRF12
128562-1	QA2-AE Test 6/M	< 0.001	< 0.001	< 0.001	0.006	< 0.001	< 0.001	< 0.001	< 0.001	< 0.001	0.079	< 0.001
128562-2	QA2-AE Test 6/Tails	< 0.001	< 0.001	< 0.001	< 0.001	< 0.001	< 0.001	< 0.001	< 0.001	< 0.001	0.196	0.004
128562-3	QA2-AE Test 6/CT1	< 0.001	< 0.001	< 0.001	< 0.001	< 0.001	0.002	0.002	< 0.001	< 0.001	0.079	0.005
128562-4	QA2-AE Test 6/CT2	< 0.001	< 0.001	< 0.001	< 0.001	< 0.001	< 0.001	< 0.001	< 0.001	< 0.001	0.047	0.005
128562-5	QA2-AE Test 6/CT3	< 0.001	< 0.001	< 0.001	< 0.001	0.002	< 0.001	0.004	< 0.001	< 0.001	0.098	0.003
128562-6	QA2-AE Test 6/CT4	< 0.001	< 0.001	< 0.001	< 0.001	0.003	< 0.001	0.004	< 0.001	< 0.001	0.035	0.002
128562-7	QA2-AE Test 6/CT5	< 0.001	< 0.001	< 0.001	< 0.001	0.003	< 0.001	0.005	< 0.001	< 0.001	0.026	0.001
128562-8	QA2-AE Test 6/CC5	< 0.001	0.002	< 0.001	< 0.001	0.002	0.002	0.006	< 0.001	< 0.001	0.064	< 0.001

Lab ID	Client ID	Yb	Zn	Sum Before Norm.	I	Se	Ar	P
		(%)	(%)	(%)	(%)	(%)	(%)	(%)
		PP-XRF12	PP-XRF12					
128562-1	QA2-AE Test 6/M	< 0.001	0.024	101.5		0.0387		0.0177
128562-2	QA2-AE Test 6/Tails	< 0.001	0.170	102.7		0.0022		
128562-3	QA2-AE Test 6/CT1	< 0.001	0.143	104.1	0.007	0.004		
128562-4	QA2-AE Test 6/CT2	< 0.001	0.138	103.9		0.003		
128562-5	QA2-AE Test 6/CT3	< 0.001	0.074	100.5	0.002	0.002		
128562-6	QA2-AE Test 6/CT4	< 0.001	0.039	99.6	0.003	0.001		
128562-7	QA2-AE Test 6/CT5	< 0.001	0.019	100.2	0.004			
128562-8	QA2-AE Test 6/CC5	< 0.001	0.013	100.5	0.01			

CRS Laboratories Oy
REPORT OF XRF-ANALYSIS 23.8.2022

Customer : GTK Mintec/Tero Korhonen
Order : ID 107745
Method : 180X-0
Date : 23.08.2022
Comment : BF BATCircle2.0 M 3.1.1-3.1.2 GRA. Ref Aitolampi samples 190822 50404-4021027

Sample PA1-AE

Contents (%)

	PA1-AE Test1/RC1 107745-1	PA1-AE Test1/RC2 107745-2	PA1-AE Test1/RC3 107745-3	PA1-AE Test1/RC4 107745-4	PA1-AE Test1/Tails 107745-5
SiO2	26.4	52.5	52.3	54.3	54.9
TiO2	0.364	0.61	0.57	0.58	0.53
Al2O3	8.86	16.0	15.3	15.4	11.8
Cr2O3	0.018	0.030	0.031	0.035	0.029
V2O3	0.116	0.190	0.187	0.194	0.173
FeO	3.78	7.86	9.55	8.98	14.1
MnO	0.040	0.064	0.065	0.070	0.054
MgO	3.60	6.11	6.22	6.29	5.55
CaO	2.48	4.12	3.92	3.93	3.10
Rb2O	0.0051	0.011	0.012	0.011	0.0091
SrO	0.012	0.019	0.018	0.019	0.013
BaO	0.031	0.059	0.058	0.061	0.047
Na2O	0.80	1.88	1.88	1.91	1.68
K2O	1.56	2.70	2.57	2.60	1.96
ZrO2	0.016	0.022	0.021	0.022	0.019
P2O5	0.061	0.123	0.123	0.129	0.147
CO2	170.9	14.4	4.64	2.99	0.38
OxSumm	95.70	99.20	99.00	99.00	98.40
Cu	0.042	0.56	1.49	0.70	0.030
Ni	0.014	0.028	0.032	0.033	0.059
Co	0.002	0.011	0.012	0.020	0.011
Zn	0.079	0.167	0.245	0.303	0.285
Pb	0.007	0.010	0.009	0.009	0.004
Ag	0.001	0.001	0.002	0.002	0.002
S	1.30	3.71	5.09	4.33	7.33
As	0.000	0.000	0.000	0.000	0.000
Sb	0.008	0.012	0.011	0.013	0.012
Bi	0.002	0.003	0.002	0.002	0.002
Te	0.002	0.000	0.000	0.001	0.000
Y	0.0032	0.0054	0.0043	0.0051	0.0045
Nb	0.0019	0.0012	0.0008	0.0011	0.0006
Mo	0.052	0.125	0.056	0.034	0.0022
Sn	0.002	0.004	0.002	0.004	0.002
W	0.001	0.001	0.001	0.000	0.000
Cl	0.002	0.005	0.006	0.005	0.007
Th	0.0004	0.0017	0.0021	0.0014	0.0014
U	0.0000	0.0000	0.0000	0.0000	0.0000
Cs	0.002	0.003	0.000	0.003	0.001
La	0.004	0.005	0.005	0.008	0.007
Ce	0.006	0.006	0.005	0.007	0.006
Ta	0.000	0.000	0.000	0.000	0.002
LOI	0.0000	0.0000	0.0000	0.0000	0.0000
Ga	0.0014	0.0024	0.0017	0.0021	0.0018
Si	12.3	24.5	24.4	25.4	25.7
Ti	0.218	0.363	0.341	0.345	0.320
Cr	0.012	0.021	0.021	0.024	0.020
V	0.079	0.129	0.127	0.132	0.117
Fe	2.94	6.11	7.43	6.99	10.9
Mn	0.031	0.050	0.051	0.054	0.042
Mg	2.17	3.68	3.75	3.79	3.35
Ca	1.77	2.95	2.80	2.81	2.21
Ba	0.028	0.052	0.052	0.055	0.042
C	46.6	3.93	1.26	0.82	0.104
S	1.4251	3.5304	4.8358	4.2220	7.1745

Crs laboratories
REPORT OF XRF-ANALYSES 29.8.2022

Customer : GTK Mintec/Tero Korhonen
Order : ID 108244
Method : 180X-0
Date : 29.08.2022
Comment : BF BatCircle 2.0M 3.1.1-3.1.2 25.8.2022 Aitolampi PA1-AE

Sample PA1-AE

Contents (%)

	PA1-AE1 T2 Tails 108244-1	PA1-AE1 T2 CT1 108244-2	PA1-AE1 T2 Ct2 108244-3	PA1-AE1 T2 CT3 108244-4	PA1-AE1 T2 CC3 108244-5
SiO2	55.1	54.5	52.4	44.2	8.73
TiO2	0.53	0.58	0.68	0.77	0.188
Al2O3	11.8	16.1	17.2	16.2	3.63
Cr2O3	0.029	0.029	0.034	0.038	0.011
V2O3	0.171	0.177	0.203	0.225	0.062
FeO	14.0	9.01	7.75	5.93	1.66
MnO	0.056	0.071	0.076	0.074	0.023
MgO	5.54	5.70	6.41	6.60	1.87
CaO	3.12	4.29	4.76	4.56	0.97
Rb2O	0.010	0.012	0.013	0.012	0.0000
SrO	0.014	0.020	0.020	0.018	0.0046
BaO	0.046	0.061	0.060	0.057	0.013
Na2O	1.67	2.06	1.85	1.39	0.19
K2O	1.97	2.69	2.88	2.79	0.65
ZrO2	0.019	0.023	0.026	0.026	0.010
P2O5	0.146	0.126	0.119	0.099	0.017
CO2	0.38	2.04	9.20	54.8	267.4
OxSumm	98.50	99.00	99.10	99.30	91.30
Cu	0.032	0.493	0.264	0.104	0.021
Ni	0.059	0.029	0.025	0.018	0.006
Co	0.001	0.007	0.007	0.003	0.002
Zn	0.287	0.197	0.148	0.093	0.020
Pb	0.004	0.008	0.009	0.009	0.008
Ag	0.002	0.001	0.001	0.001	0.001
S	7.28	3.95	2.62	1.67	0.407
As	0.000	0.000	0.000	0.000	0.000
Sb	0.010	0.011	0.011	0.012	0.004
Bi	0.002	0.003	0.003	0.002	0.002
Te	0.000	0.000	0.000	0.001	0.000
Y	0.0035	0.0046	0.0059	0.0063	0.0013
Nb	0.0008	0.0016	0.0012	0.0018	0.0022
Mo	0.0025	0.036	0.109	0.192	0.058
Sn	0.002	0.002	0.003	0.003	0.002
W	0.000	0.001	0.000	0.001	0.000
Cl	0.006	0.007	0.002	0.004	0.003
Th	0.0012	0.0013	0.0013	0.0019	0.0016
U	0.0000	0.0000	0.0000	0.0000	0.0000
Cs	0.002	0.001	0.002	0.002	0.001
La	0.006	0.006	0.007	0.007	0.003
Ce	0.004	0.006	0.011	0.007	0.003
Ta	0.001	0.000	0.000	0.001	0.000
LOI	0.0000	0.0000	0.0000	0.0000	0.0000
Ga	0.0024	0.0019	0.0021	0.0023	0.0007
Si	25.7	25.5	24.5	20.6	4.08
Ti	0.321	0.349	0.407	0.460	0.113
Cr	0.020	0.020	0.023	0.026	0.0073
V	0.117	0.120	0.138	0.153	0.042
Fe	10.9	7.00	6.03	4.61	1.29
Mn	0.043	0.055	0.059	0.058	0.018
Mg	3.34	3.44	3.87	3.98	1.13
Ca	2.23	3.06	3.40	3.26	0.70
Ba	0.041	0.055	0.054	0.051	0.011
C	0.103	0.56	2.51	14.9	72.9
S	6.74	3.63	2.43	1.56	0.460

CRS Laboratories
REPORT OF XRF-ANALYSES 7.10.2022

Customer : Tero Korhonen/GTK
Order : ID 111257
Method : 180X-0
Date : 07.10.2022
Comment : BF BATCircle 2.0M 3.1.1-3.1.2 Gra. Ref.

Sample PA1-AE

Contents (%)

	PA1-AE1 Test 3/Tails 111257-1	PA1-AE1 Test 3/CT1 111257-2	PA1-AE1 Test 3/CT2 111257-3	PA1-AE1 Test 3/CT3 111257-4	PA1-AE1 Test 3/CC3 111257-5	PA1-AE1 Test 3/M1 111257-6	PA1-AE1 Test 3/M2 111257-7
SiO2	64.5	56.8	53.1	28.7	6.05	3.02	45.4
TiO2	0.64	0.62	0.69	0.59	0.153	0.032	0.423
Al2O3	13.8	17.0	17.3	10.8	2.59	0.97	11.7
Cr2O3	0.102	0.034	0.034	0.031	0.0080	0.0058	0.029
V2O3	0.205	0.195	0.201	0.167	0.047	0.013	0.142
FeO	4.00	6.15	7.11	4.40	1.27	69.4	20.3
MnO	0.063	0.077	0.083	0.059	0.017	0.011	0.048
MgO	6.56	5.99	6.40	4.93	1.35	0.39	4.25
CaO	3.68	4.60	4.76	3.05	0.67	0.215	3.04
Rb2O	0.0088	0.013	0.012	0.0067	0.0000	0.011	0.0089
SrO	0.017	0.021	0.020	0.012	0.0012	0.0000	0.012
BaO	0.053	0.062	0.057	0.038	0.008	0.005	0.042
Na2O	1.83	2.07	1.81	0.76	0.12	0.21	2.02
K2O	2.35	2.89	2.81	1.83	0.449	0.099	1.71
ZrO2	0.022	0.025	0.026	0.020	0.007	0.003	0.017
P2O5	0.179	0.123	0.120	0.069	0.013	0.005	0.093
CO2	0.41	1.90	10.3	142.4	306.2	0.93	10.1
OxSumm	99.50	99.30	99.20	95.40	96.50	92.40	97.90
Cu	0.020	0.476	0.324	0.098	0.019	0.027	0.094
Ni	0.013	0.014	0.019	0.013	0.004	0.327	0.104
Co	0.007	0.009	0.010	0.005	0.003	0.016	0.009
Zn	0.328	0.255	0.193	0.076	0.015	0.030	0.214
Pb	0.006	0.008	0.009	0.009	0.008	0.000	0.004
Ag	0.001	0.002	0.001	0.002	0.000	0.002	0.001
S	1.69	2.13	1.95	1.03	0.325	34.3	10.8
As	0.000	0.000	0.000	0.000	0.000	0.002	0.000
Sb	0.011	0.011	0.011	0.010	0.001	0.009	0.010
Bi	0.002	0.002	0.002	0.002	0.001	0.002	0.002
Te	0.001	0.000	0.000	0.003	0.001	0.000	0.000
Y	0.0042	0.0052	0.0061	0.0040	0.0023	0.0000	0.0038
Nb	0.0016	0.0014	0.0014	0.0017	0.0019	0.0000	0.0000
Mo	0.0035	0.037	0.128	0.177	0.043	0.0000	0.0090
Sn	0.003	0.003	0.003	0.003	0.001	0.001	0.002
W	0.001	0.001	0.000	0.001	0.001	0.000	0.001
Cl	0.005	0.005	0.003	0.003	0.002	0.000	0.005
Th	0.0019	0.0017	0.0021	0.0010	0.0017	0.0013	0.0008
U	0.0000	0.0000	0.0000	0.0000	0.0000	0.0096	0.0009
Cs	0.002	0.002	0.003	0.001	0.001	0.002	0.002
La	0.007	0.006	0.006	0.006	0.002	0.002	0.003
Ce	0.007	0.009	0.009	0.007	0.002	0.002	0.006
Ta	0.001	0.000	0.000	0.000	0.000	0.007	0.001
LOI	0.0000	0.0000	0.0000	0.0000	0.0000	0.0000	0.0000
Ga	0.0019	0.0016	0.0020	0.0021	0.0007	0.0010	0.0023
Si	30.2	26.6	24.8	13.4	2.83	1.41	21.2
Ti	0.384	0.370	0.416	0.355	0.092	0.019	0.253
Cr	0.070	0.023	0.023	0.021	0.0055	0.0040	0.020
V	0.139	0.133	0.136	0.113	0.032	0.0086	0.097
Fe	3.11	4.78	5.53	3.42	0.99	54.0	15.8
Mn	0.049	0.060	0.065	0.046	0.014	0.008	0.037
Mg	3.96	3.61	3.86	2.97	0.81	0.23	2.57
Ca	2.63	3.28	3.40	2.18	0.476	0.154	2.17
Ba	0.047	0.055	0.051	0.034	0.007	0.005	0.038
C	0.112	0.52	2.82	38.8	83.5	0.252	2.76
S	1.62	1.97	1.80	1.02	0.3072	38.10	10.40

CRS Laboratories
REPORT OF XRF-ANALYSES 27.1.2023

Customer : GTK / Tero Korhonen
Order : ID 117906
Method : 180X-0
Date : 27.1.2023
Comment : BF BATCircle 2.0M 3.1.1-3.1.2 Gra. Ref. 11.1.2023

Sample PA1-AE

Contents (%)

	PA1-AE1 Test 4/Tails 117906-1	PA1-AE1 Test 4/CT1 117906-2	PA1-AE1 Test 4/CT2 117906-3	PA1-AE1 Test 4/CT3 117906-4	PA1-AE1 Test 4/CC3 117906-5	PA1-AE1 Test 4/M1 117906-6
SiO2	64.3	55.5	49.6	14.2	4.48	7.68
TiO2	0.64	0.63	0.61	0.262	0.132	0.068
Al2O3	14.0	17.7	15.8	4.85	1.76	2.44
Cr2O3	0.034	0.050	0.046	0.020	0.010	0.011
V2O3	0.203	0.203	0.175	0.070	0.033	0.028
FeO	4.06	7.29	7.29	2.96	1.49	63.7
MnO	0.063	0.090	0.081	0.032	0.015	0.018
MgO	6.44	6.23	5.50	1.93	0.83	0.79
CaO	3.71	4.68	4.26	1.39	0.464	0.53
Rb2O	0.0088	0.013	0.011	0.0000	0.0020	0.012
SrO	0.016	0.021	0.019	0.0069	0.0006	0.0000
BaO	0.059	0.063	0.054	0.018	0.006	0.008
Na2O	1.86	1.96	1.73	0.39	0.09	0.52
K2O	2.34	2.93	2.54	0.79	0.280	0.277
ZrO2	0.022	0.029	0.026	0.009	0.004	0.004
P2O5	0.193	0.126	0.111	0.033	0.013	0.012
CO2	0.51	15.0	37.0	249.2	318.5	1.89
OxSumm	99.60	103.20	99.40	95.50	96.80	93.00
Cu	0.060	0.260	0.201	0.064	0.021	0.035
Ni	0.013	0.015	0.016	0.007	0.005	0.294
Co	0.012	0.011	0.011	0.004	0.003	0.013
Zn	0.337	0.166	0.144	0.045	0.013	0.043
Pb	0.007	0.008	0.007	0.009	0.008	0.000
Ag	0.001	0.001	0.002	0.001	0.001	0.003
S	1.81	1.77	1.56	0.57	0.334	31.6
As	0.000	0.000	0.000	0.000	0.000	0.001
Sb	0.011	0.012	0.011	0.004	0.001	0.008
Bi	0.002	0.003	0.002	0.002	0.001	0.003
Te	0.000	0.000	0.000	0.000	0.001	0.000
Y	0.0045	0.0051	0.0051	0.0022	0.0016	0.0000
Nb	0.0018	0.0023	0.0019	0.0024	0.0020	0.0000
Mo	0.0046	0.067	0.077	0.063	0.039	0.0000
Sn	0.003	0.003	0.003	0.003	0.001	0.001
W	0.001	0.001	0.001	0.000	0.001	0.001
Cl	0.007	0.003	0.004	0.003	0.002	0.001
Th	0.0017	0.0017	0.0017	0.0005	0.0015	0.0011
U	0.0000	0.0000	0.0000	0.0000	0.0000	0.0090
Cs	0.003	0.002	0.002	0.001	0.001	0.003
La	0.005	0.008	0.006	0.002	0.002	0.003
Ce	0.007	0.009	0.009	0.002	0.002	0.000
Ta	0.001	0.000	0.001	0.000	0.000	0.001
LOI	0.0000	0.0000	0.0000	0.0000	0.0000	0.0000
Ga	0.0023	0.0025	0.0025	0.0010	0.0007	0.0019
Si	30.1	26.0	23.2	6.65	2.09	3.59
Ti	0.383	0.379	0.367	0.157	0.079	0.041
Cr	0.023	0.034	0.032	0.014	0.0071	0.0077
V	0.138	0.138	0.119	0.048	0.023	0.019
Fe	3.16	5.67	5.67	2.30	1.16	49.6
Mn	0.049	0.070	0.063	0.025	0.012	0.014
Mg	3.88	3.76	3.32	1.17	0.50	0.48
Ca	2.65	3.34	3.05	0.99	0.332	0.382
Ba	0.053	0.056	0.049	0.016	0.005	0.007
C	0.138	4.09	10.1	68.0	86.8	0.52
S	1.72	1.58	1.47	0.5879	0.2957	34.40

CRS Laboratories
Thermo performX XRF results

Batch BatCircle PA1-AE Test 5
Method X_UQ_3600W Oxides
Template
Report date 3/23/2023
Client GTK Mintec - Tero Korhonen

Sample Name	Client ID	Al2O3	BaO	CaO	Cr2O3	Fe	Fe2O3	K2O	MgO	Mn	MnO
		(%)	(%)	(%)	(%)	(%)	(%)	(%)	(%)	(%)	(%)
		PP-XRF12	PP-XRF12	PP-XRF12	PP-XRF12	PP-XRF12	PP-XRF12	PP-XRF12	PP-XRF12	PP-XRF12	PP-XRF12
124023-9	PA1-AE Test 5 M1	2.86	< 0.001	0.694	0.0071	48.88		0.431	1.04	0.0198	
124023-10	PA1-AE Test 5 Tails	13.951	0.052	3.562	0.029		4.238	2.628	4.63		0.068
124023-11	PA1-AE Test 5 CT1	12.893	0.039	3.487	0.053		7.761	2.494	3.489		0.086
124023-12	PA1-AE Test 5 CT2	13.075	0.041	3.533	0.052		7.789	2.516	3.542		0.086
124023-13	PA1-AE Test 5 CT3	9.597	0.03	2.649	0.046		6.749	1.847	2.633		0.071
124023-14	PA1-AE Test 5 CT4	9.366	0.03	2.556	0.049		7.203	1.773	2.598		0.072
124023-15	PA1-AE Test 5 CC4	2.481	0.007	0.643	0.024		3.716	0.458	0.815		0.032

Sample Name	Client ID	Na2O	P2O5	Rb2O	SiO2	SrO	TiO2	V2O5	ZrO2	Ag	As
		(%)	(%)	(%)	(%)	(%)	(%)	(%)	(%)	(%)	(%)
		PP-XRF12	PP-XRF12	PP-XRF12	PP-XRF12	PP-XRF12	PP-XRF12	PP-XRF12	PP-XRF12	PP-XRF12	PP-XRF12
124023-9	PA1-AE Test 5 M1	0.889	0.0424	0.0014	9.12	0.0028	0.0783	0.0389	0.0027	0.0033	< 0.001
124023-10	PA1-AE Test 5 Tails	2.142	0.171	0.011	64.838	0.017	0.566	0.248	0.022	< 0.001	< 0.001
124023-11	PA1-AE Test 5 CT1	1.61	0.096	0.011	42.424	0.016	0.458	0.194	0.022	< 0.001	< 0.001
124023-12	PA1-AE Test 5 CT2	1.642	0.099	0.011	43.14	0.017	0.462	0.196	0.023	< 0.001	< 0.001
124023-13	PA1-AE Test 5 CT3	1.163	0.072	0.008	31.522	0.013	0.376	0.149	0.017	< 0.001	< 0.001
124023-14	PA1-AE Test 5 CT4	1.117	0.072	0.008	30.462	0.012	0.38	0.147	0.016	< 0.001	< 0.001
124023-15	PA1-AE Test 5 CC4	0.225	0.021	0.002	7.165	0.003	0.131	0.051	0.005	< 0.001	< 0.001

Sample Name	Client ID	Bi	Ce	Cl	Co	Cs	Cu	Dy	Er	Eu	Ga
		(%)	(%)	(%)	(%)	(%)	(%)	(%)	(%)	(%)	(%)
		PP-XRF12	PP-XRF12	PP-XRF12	PP-XRF12	PP-XRF12	PP-XRF12	PP-XRF12	PP-XRF12	PP-XRF12	PP-XRF12
124023-9	PA1-AE Test 5 M1	< 0.001	< 0.001	0.0202	0.0349	< 0.001	0.0369	< 0.001	< 0.001	< 0.001	< 0.001
124023-10	PA1-AE Test 5 Tails	< 0.001	0.007	0.003	0.033	0.001	0.042	< 0.001	0.002	< 0.001	0.001
124023-11	PA1-AE Test 5 CT1	< 0.001	0.005	0.002	0.012	< 0.001	0.347	< 0.001	< 0.001	< 0.001	0.002
124023-12	PA1-AE Test 5 CT2	< 0.001	0.001	0.002	0.014	< 0.001	0.342	< 0.001	0.002	< 0.001	0.002
124023-13	PA1-AE Test 5 CT3	< 0.001	0.002	0.002	0.009	< 0.001	0.268	< 0.001	0.001	< 0.001	0.001
124023-14	PA1-AE Test 5 CT4	< 0.001	0.002	< 0.001	0.01	< 0.001	0.273	< 0.001	< 0.001	< 0.001	0.001
124023-15	PA1-AE Test 5 CC4	< 0.001	< 0.001	< 0.001	0.004	0.002	0.096	< 0.001	< 0.001	< 0.001	< 0.001

Sample Name	Client ID	Gd	Hf	Ho	La	Lu	Mo	Nb	Nd	Ni	Pb
		(%)	(%)	(%)	(%)	(%)	(%)	(%)	(%)	(%)	(%)
		PP-XRF12	PP-XRF12	PP-XRF12	PP-XRF12	PP-XRF12	PP-XRF12	PP-XRF12	PP-XRF12	PP-XRF12	PP-XRF12
124023-9	PA1-AE Test 5 M1	0.037	< 0.001	< 0.001	< 0.001	< 0.001	0.0041	< 0.001	< 0.001	0.299	< 0.001
124023-10	PA1-AE Test 5 Tails	< 0.001	< 0.001	< 0.001	0.004	< 0.001	0.01	0.001	0.002	0.012	< 0.001
124023-11	PA1-AE Test 5 CT1	0.002	< 0.001	< 0.001	0.004	< 0.001	0.093	0.001	0.001	0.014	0.001
124023-12	PA1-AE Test 5 CT2	0.001	< 0.001	< 0.001	0.003	< 0.001	0.091	0.001	< 0.001	0.015	< 0.001
124023-13	PA1-AE Test 5 CT3	0.002	< 0.001	< 0.001	0.003	< 0.001	0.107	0.001	< 0.001	0.013	0.001
124023-14	PA1-AE Test 5 CT4	0.001	< 0.001	< 0.001	0.003	< 0.001	0.127	0.001	0.001	0.014	0.001
124023-15	PA1-AE Test 5 CC4	0.002	< 0.001	< 0.001	0.001	< 0.001	0.094	0.002	< 0.001	0.008	0.001

Sample Name	Client ID	Pr	S	Sb	Sm	Sn	Ta	Tb	Te	Th	Tm
		(%)	(%)	(%)	(%)	(%)	(%)	(%)	(%)	(%)	(%)
		PP-XRF12	PP-XRF12	PP-XRF12	PP-XRF12	PP-XRF12	PP-XRF12	PP-XRF12	PP-XRF12	PP-XRF12	PP-XRF12
124023-9	PA1-AE Test 5 M1	< 0.001	< 0.001	< 0.001	< 0.001	< 0.001	< 0.001	< 0.001	< 0.001	< 0.001	< 0.001
124023-10	PA1-AE Test 5 Tails	< 0.001	1.977	< 0.001	< 0.001	< 0.001	< 0.001	< 0.001	0.001	< 0.001	< 0.001
124023-11	PA1-AE Test 5 CT1	< 0.001	1.699	< 0.001	< 0.001	< 0.001	< 0.001	< 0.001	< 0.001	< 0.001	< 0.001
124023-12	PA1-AE Test 5 CT2	< 0.001	1.696	< 0.001	< 0.001	< 0.001	< 0.001	< 0.001	< 0.001	< 0.001	< 0.001
124023-13	PA1-AE Test 5 CT3	< 0.001	1.33	< 0.001	< 0.001	< 0.001	< 0.001	< 0.001	< 0.001	< 0.001	< 0.001
124023-14	PA1-AE Test 5 CT4	< 0.001	1.363	< 0.001	< 0.001	< 0.001	< 0.001	< 0.001	< 0.001	< 0.001	< 0.001
124023-15	PA1-AE Test 5 CC4	< 0.001	0.614	< 0.001	< 0.001	< 0.001	< 0.001	0.003	< 0.001	0.002	< 0.001

Sample Name	Client ID	U	W	Y	Yb	Zn	Sum Before Norm.	Fe*	I	Se	Au
		(%)	(%)	(%)	(%)	(%)	(%)	(%)	(%)	(%)	(%)
		PP-XRF12	PP-XRF12	PP-XRF12	PP-XRF12	PP-XRF12			PP-XRF12	PP-XRF12	PP-XRF12
124023-9	PA1-AE Test 5 M1	< 0.001	0.0479	< 0.001	< 0.001	0.0418	101.7			0.0292	
124023-10	PA1-AE Test 5 Tails	< 0.001	0.161	0.006	< 0.001	0.365	106.949	2.964	0.003	0.003	
124023-11	PA1-AE Test 5 CT1	< 0.001	0.038	0.006	< 0.001	0.16	102.665	5.428	0.001	0.003	
124023-12	PA1-AE Test 5 CT2	< 0.001	0.042	0.006	< 0.001	0.159	103.166	5.448	0.001	0.003	
124023-13	PA1-AE Test 5 CT3	< 0.001	0.032	0.005	< 0.001	0.125	101.01	4.721		0.002	
124023-14	PA1-AE Test 5 CT4	< 0.001	0.035	0.005	< 0.001	0.125	101.175	5.038	0.001	0.003	
124023-15	PA1-AE Test 5 CC4	< 0.001	0.02	0.002	< 0.001	0.04	99.379	2.599	0.002	0.001	

Sample Name	Client ID	Re	Cd	F	Rh	Ru	Sc	Ar	Pt	Eltra C	Leco S
		(%)	(%)	(%)	(%)	(%)	(%)	(%)	(%)	(%)	(%)
		PP-XRF12	PP-XRF12	PP-XRF12	PP-XRF12	PP-XRF12	PP-XRF12	PP-XRF12	PP-XRF12		
124023-9	PA1-AE Test 5 M1							0.0075		0.5	34.79
124023-10	PA1-AE Test 5 Tails	0.001	0.005	0.105						0.1	1.74
124023-11	PA1-AE Test 5 CT1		0.001							22.48	1.31
124023-12	PA1-AE Test 5 CT2		0.002							21.4	1.33
124023-13	PA1-AE Test 5 CT3									41.16	1.07
124023-14	PA1-AE Test 5 CT4									42.18	1.1
124023-15	PA1-AE Test 5 CC4									83.34	0.45

CRS Laboratories
Thermo PerformX XRF results

Batch	BF BatCircle 2, Aitolampi PA1-AE Test 6
Method	X_UQ_3600W Oxides, X_UQ_3600W Sulphides
Report date	15.6.2023
Client	GTK / Tero Korhonen
Notes	

Lab ID	Client ID	C	S	Al2O3	BaO	CaO	Cr2O3	Fe	Fe2O3	K2O	MgO	Mn
		(%)	(%)	(%)	(%)	(%)	(%)	(%)	(%)	(%)	(%)	(%)
		CA-C	CA-S	PP-XRF12	PP-XRF12	PP-XRF12	PP-XRF12	PP-XRF12	PP-XRF12	PP-XRF12	PP-XRF12	PP-XRF12
128753-1	PA1-AE Test 6/M	1.67	26.56	5.300	0.011	1.450	0.011	37.130		0.900	1.770	0.028
128753-2	PA1-AE Test 6/Tails	0.17	1.670	13.590	0.052	3.760	0.030	2.890	4.140	2.690	5.040	0.057
128753-3	PA1-AE Test 6/CT1	17.76	1.40	14.015	0.046	3.621	0.05	5.634	8.055	2.611	3.58	
128753-4	PA1-AE Test 6/CT2	22.25	1.31	12.924	0.03	3.49	0.048	5.49	7.849	2.471	3.479	
128753-5	PA1-AE Test 6/CT3	50.54	0.95	8.053	0.027	2.191	0.036	4.227	6.043	1.535	2.207	
128753-6	PA1-AE Test 6/CT4	69.31	0.66	4.849	0.02	1.329	0.028	3.303	4.722	0.923	1.381	
128753-7	PA1-AE Test 6/CT5	82.45	0.46	2.698	0.016	0.695	0.02	2.397	3.427	0.494	0.847	
128753-8	PA1-AE Test 6/CC5	88.70	0.37	1.71	0.012	0.403	0.016	1.806	2.582	0.301	0.579	

Lab ID	Client ID	MnO	Na2O	P2O5	Rb2O	SiO2	SrO	TiO2	V2O5	ZrO2	Ag	As
		(%)	(%)	(%)	(%)	(%)	(%)	(%)	(%)	(%)	(%)	(%)
		PP-XRF12	PP-XRF12	PP-XRF12	PP-XRF12	PP-XRF12	PP-XRF12	PP-XRF12	PP-XRF12	PP-XRF12	PP-XRF12	PP-XRF12
128753-1	PA1-AE Test 6/M		1.090	0.086	0.003	23.070	0.005	0.219	0.075	0.007	0.003	< 0.001
128753-2	PA1-AE Test 6/Tails	0.074	2.310	0.186	0.011	64.460	0.018	0.583	0.252	0.023	< 0.001	< 0.001
128753-3	PA1-AE Test 6/CT1	0.09	1.715	0.096	0.011	45.504	0.017	0.485	0.205	0.023	< 0.001	< 0.001
128753-4	PA1-AE Test 6/CT2	0.087	1.647	0.098	0.011	42.953	0.016	0.468	0.19	0.023	< 0.001	< 0.001
128753-5	PA1-AE Test 6/CT3	0.062	0.967	0.062	0.007	26.346	0.011	0.322	0.125	0.015	< 0.001	< 0.001
128753-6	PA1-AE Test 6/CT4	0.045	0.54	0.039	0.004	15.418	0.006	0.221	0.083	0.01	< 0.001	< 0.001
128753-7	PA1-AE Test 6/CT5	0.031	0.268	0.023	0.003	8.053	0.004	0.136	0.053	0.006	< 0.001	< 0.001
128753-8	PA1-AE Test 6/CC5	0.022	0.149	0.017	0.002	4.777	0.002	0.087	0.036	0.004	< 0.001	< 0.001

Lab ID	Client ID	Bi	Ce	Cl	Co	Cs	Cu	Dy	Er	Eu	Ga	Gd
		(%)	(%)	(%)	(%)	(%)	(%)	(%)	(%)	(%)	(%)	(%)
		PP-XRF12	PP-XRF12	PP-XRF12	PP-XRF12	PP-XRF12	PP-XRF12	PP-XRF12	PP-XRF12	PP-XRF12	PP-XRF12	PP-XRF12
128753-1	PA1-AE Test 6/M	< 0.001	< 0.001	0.019	0.037	< 0.001	0.046	< 0.001	< 0.001	< 0.001	0.001	0.028
128753-2	PA1-AE Test 6/Tails	< 0.001	0.004	0.002	0.028	< 0.001	0.043	< 0.001	0.005	< 0.001	0.001	< 0.001
128753-3	PA1-AE Test 6/CT1	< 0.001	0.003	< 0.001	0.03	< 0.001	0.333	< 0.001	0.003	< 0.001	0.002	< 0.001
128753-4	PA1-AE Test 6/CT2	< 0.001	0.004	0.003	0.022	< 0.001	0.294	< 0.001	0.002	< 0.001	0.002	0.001
128753-5	PA1-AE Test 6/CT3	< 0.001	< 0.001	0.001	0.013	< 0.001	0.208	< 0.001	< 0.001	< 0.001	0.001	0.001
128753-6	PA1-AE Test 6/CT4	< 0.001	0.002	< 0.001	0.013	0.002	0.153	< 0.001	< 0.001	< 0.001	< 0.001	0.002
128753-7	PA1-AE Test 6/CT5	< 0.001	0.001	< 0.001	0.008	0.003	0.102	< 0.001	< 0.001	< 0.001	< 0.001	0.002
128753-8	PA1-AE Test 6/CC5	< 0.001	< 0.001	< 0.001	0.009	0.004	0.071	< 0.001	< 0.001	< 0.001	< 0.001	0.001

Lab ID	Client ID	Hf	Ho	La	Lu	Mo	Nb	Nd	Ni	Pb	Pr	S
		(%)	(%)	(%)	(%)	(%)	(%)	(%)	(%)	(%)	(%)	(%)
		PP-XRF12	PP-XRF12	PP-XRF12	PP-XRF12	PP-XRF12	PP-XRF12	PP-XRF12	PP-XRF12	PP-XRF12	PP-XRF12	PP-XRF12
128753-1	PA1-AE Test 6/M	< 0.001	< 0.001	< 0.001	< 0.001	0.007	< 0.001	< 0.001	0.220	< 0.001	< 0.001	< 0.001
128753-2	PA1-AE Test 6/Tails	< 0.001	< 0.001	0.003	< 0.001	0.008	0.002	0.003	0.010	< 0.001	< 0.001	< 0.001
128753-3	PA1-AE Test 6/CT1	< 0.001	< 0.001	0.002	< 0.001	0.091	0.002	0.002	0.014	< 0.001	< 0.001	< 0.001
128753-4	PA1-AE Test 6/CT2	< 0.001	< 0.001	0.004	< 0.001	0.09	0.002	0.001	0.013	< 0.001	< 0.001	< 0.001
128753-5	PA1-AE Test 6/CT3	< 0.001	< 0.001	0.002	< 0.001	0.118	0.002	< 0.001	0.011	< 0.001	< 0.001	< 0.001
128753-6	PA1-AE Test 6/CT4	< 0.001	< 0.001	0.002	< 0.001	0.135	0.002	< 0.001	0.009	0.001	< 0.001	< 0.001
128753-7	PA1-AE Test 6/CT5	< 0.001	< 0.001	0.001	< 0.001	0.133	0.002	0.001	0.006	0.001	< 0.001	< 0.001
128753-8	PA1-AE Test 6/CC5	< 0.001	< 0.001	< 0.001	< 0.001	0.101	0.002	< 0.001	0.005	0.001	< 0.001	< 0.001

Lab ID	Client ID	Sb	Sm	Sn	Ta	Tb	Te	Th	Tm	U	W	Y
		(%)	(%)	(%)	(%)	(%)	(%)	(%)	(%)	(%)	(%)	(%)
		PP-XRF12	PP-XRF12	PP-XRF12	PP-XRF12	PP-XRF12	PP-XRF12	PP-XRF12	PP-XRF12	PP-XRF12	PP-XRF12	PP-XRF12
128753-1	PA1-AE Test 6/M	< 0.001	< 0.001	< 0.001	< 0.001	< 0.001	< 0.001	< 0.001	< 0.001	< 0.001	0.072	0.002
128753-2	PA1-AE Test 6/Tails	< 0.001	< 0.001	< 0.001	< 0.001	< 0.001	< 0.001	< 0.001	< 0.001	< 0.001	0.161	0.005
128753-3	PA1-AE Test 6/CT1	< 0.001	< 0.001	< 0.001	< 0.001	< 0.001	0.001	< 0.001	< 0.001	< 0.001	0.073	0.006
128753-4	PA1-AE Test 6/CT2	< 0.001	< 0.001	< 0.001	< 0.001	< 0.001	< 0.001	< 0.001	< 0.001	< 0.001	0.063	0.006
128753-5	PA1-AE Test 6/CT3	< 0.001	< 0.001	< 0.001	< 0.001	< 0.001	< 0.001	< 0.001	< 0.001	< 0.001	0.04	0.004
128753-6	PA1-AE Test 6/CT4	< 0.001	< 0.001	< 0.001	< 0.001	0.002	< 0.001	< 0.001	< 0.001	< 0.001	0.027	0.003
128753-7	PA1-AE Test 6/CT5	< 0.001	< 0.001	< 0.001	< 0.001	0.002	< 0.001	0.003	< 0.001	< 0.001	0.022	0.002
128753-8	PA1-AE Test 6/CC5	< 0.001	< 0.001	< 0.001	< 0.001	0.002	< 0.001	0.003	< 0.001	< 0.001	0.024	0.002

Lab ID	Client ID	Yb	Zn	Sum Before Norm.	Cd	F	I	Se	Re	Ar
		(%)	(%)	(%)	(%)	(%)	(%)	(%)	(%)	(%)
		PP-XRF12	PP-XRF12							
128753-1	PA1-AE Test 6/M	< 0.001	0.106	102.6	0.002			0.022		
128753-2	PA1-AE Test 6/Tails	< 0.001	0.301	102.1	0.004	0.219		0.002		
128753-3	PA1-AE Test 6/CT1	< 0.001	0.161	103.6	0.001	0.015	0.002	0.003		
128753-4	PA1-AE Test 6/CT2	< 0.001	0.152	102.5	0.001			0.003		
128753-5	PA1-AE Test 6/CT3	< 0.001	0.098	100.5				0.002		
128753-6	PA1-AE Test 6/CT4	< 0.001	0.063	98.9				0.002		
128753-7	PA1-AE Test 6/CT5	< 0.001	0.034	99.6			0.002	0.001		
128753-8	PA1-AE Test 6/CC5	< 0.001	0.02	100.2			0.003	0.001		

Crs laboratories
REPORT OF XRF-ANALYSES 23.8.2022

Customer : Gtk Tero Korhonen
Order : ID 107929
Method : 180X-0
Date : 23.08.2022
Comment : BF BatCircle 2.0M 3.1.1-3.1.2 Aitolampi samples
Sample ZA5-AE

Contents (%)

	ZA5-AE	ZA5-AE	ZA5-AE	ZA5-AE	ZA5-AE
	Test 1	Test 1	Test 1	Test 1	Test 1
	Test 1/ RC1	Test 1/ RC2	Test 1/ RC3	Test 1/ RC4	Test 1/Tails
	107929-1	107929-2	107929-3	107929-4	107929-5
SiO2	23.4	49.4	50.9	54.6	57.4
TiO2	0.305	0.60	0.60	0.62	0.56
Al2O3	7.72	15.7	15.5	15.5	12.6
Cr2O3	0.017	0.030	0.034	0.036	0.030
V2O3	0.090	0.169	0.170	0.180	0.153
FeO	3.00	6.12	9.77	9.16	11.8
MnO	0.035	0.062	0.062	0.069	0.053
MgO	2.86	5.51	5.72	5.82	5.32
CaO	2.15	4.17	3.83	3.78	2.93
Rb2O	0.0022	0.0091	0.012	0.011	0.0093
SrO	0.013	0.024	0.023	0.022	0.018
BaO	0.029	0.064	0.062	0.057	0.052
Na2O	0.88	2.19	2.23	2.26	2.00
K2O	1.18	2.37	2.33	2.34	1.98
ZrO2	0.013	0.021	0.020	0.021	0.018
P2O5	0.047	0.088	0.110	0.125	0.154
CO2	191.1	37.6	4.11	1.97	0.16
OxSumm	94.80	99.70	99.00	99.00	98.70
Cu	0.046	0.61	2.42	0.72	0.028
Ni	0.011	0.021	0.030	0.036	0.045
Co	0.000	0.007	0.013	0.016	0.011
Zn	0.078	0.139	0.277	0.353	0.273
Pb	0.008	0.011	0.009	0.009	0.005
Ag	0.001	0.002	0.004	0.003	0.001
S	1.18	3.13	5.84	4.65	6.09
As	0.000	0.000	0.000	0.000	0.000
Sb	0.008	0.010	0.011	0.012	0.010
Bi	0.002	0.002	0.003	0.003	0.002
Te	0.003	0.000	0.000	0.001	0.000
Y	0.0025	0.0043	0.0044	0.0040	0.0043
Nb	0.0018	0.0015	0.0008	0.0013	0.0011
Mo	0.064	0.158	0.065	0.032	0.0012
Sn	0.002	0.003	0.003	0.003	0.002
W	0.000	0.001	0.000	0.000	0.001
Cl	0.004	0.007	0.006	0.010	0.010
Th	0.0005	0.0019	0.0013	0.0005	0.0009
U	0.0000	0.0000	0.0000	0.0000	0.0000
Cs	0.001	0.001	0.003	0.003	0.003
La	0.004	0.007	0.009	0.009	0.004
Ce	0.005	0.007	0.008	0.009	0.007
Ta	0.000	0.000	0.000	0.001	0.001
LOI	0.0000	0.0000	0.0000	0.0000	0.0000
Ga	0.0012	0.0025	0.0018	0.0018	0.0014
Si	11.0	23.1	23.8	25.5	26.9
Ti	0.183	0.359	0.357	0.373	0.334
Cr	0.011	0.020	0.023	0.025	0.021
V	0.061	0.115	0.116	0.122	0.104
Fe	2.34	4.76	7.60	7.12	9.14
Mn	0.027	0.048	0.048	0.054	0.041
Mg	1.73	3.32	3.45	3.51	3.21
Ca	1.53	2.98	2.74	2.70	2.09
Ba	0.026	0.058	0.055	0.051	0.047
C	52.1	10.2	1.12	0.54	0.043
S	1.20	2.74	5.38	4.15	5.61

CRS Laboratories Oy
REPORT OF XRF-ANALYSIS 30.8.2022

Customer : GTK Mintec/Tero Korhonen
Order : ID 108514
Method : 180X-0
Date : 30.08.2022
Comment : BF BATCircle2.0 M 3.1.1-3.1.2 GRA.Ref Aitolampi samples 290822 50404-4021027

Sample ZA5-AE

Contents (%)

	ZA5-AE Test 2/Tails 108514-1	ZA5-AE Test 2/CT1 108514-2	ZA5-AE Test 2/CT2 108514-3	ZA5-AE Test 2/CT3 108514-4	ZA5-AE Test 2/CC3 108514-5
SiO2	57.0	55.0	53.6	43.7	6.15
TiO2	0.57	0.61	0.63	0.62	0.111
Al2O3	12.7	16.4	17.4	15.8	2.52
Cr2O3	0.033	0.034	0.034	0.036	0.0070
V2O3	0.157	0.166	0.173	0.187	0.040
FeO	12.0	8.61	7.21	4.75	1.09
MnO	0.054	0.069	0.079	0.079	0.017
MgO	5.37	5.54	5.68	5.98	1.15
CaO	2.94	4.24	4.79	4.56	0.68
Rb2O	0.0093	0.0096	0.011	0.0097	0.0000
SrO	0.017	0.024	0.026	0.023	0.0026
BaO	0.047	0.059	0.062	0.059	0.009
Na2O	1.99	2.41	2.39	1.82	0.19
K2O	2.02	2.33	2.49	2.48	0.421
ZrO2	0.018	0.022	0.024	0.023	0.006
P2O5	0.156	0.114	0.093	0.054	0.006
CO2	0.15	1.33	7.96	64.5	302.9
OxSumm	98.70	99.10	99.20	99.50	95.30
Cu	0.030	0.64	0.400	0.151	0.021
Ni	0.048	0.027	0.022	0.013	0.003
Co	0.008	0.009	0.007	0.005	0.001
Zn	0.271	0.215	0.159	0.086	0.014
Pb	0.006	0.008	0.009	0.011	0.007
Ag	0.001	0.002	0.001	0.002	0.001
S	6.26	3.77	2.62	1.67	0.373
As	0.000	0.000	0.000	0.000	0.000
Sb	0.011	0.010	0.011	0.011	0.002
Bi	0.002	0.003	0.002	0.003	0.001
Te	0.000	0.000	0.000	0.002	0.001
Y	0.0034	0.0042	0.0054	0.0044	0.0023
Nb	0.0010	0.0009	0.0014	0.0025	0.0017
Mo	0.0017	0.035	0.184	0.331	0.056
Sn	0.003	0.003	0.003	0.003	0.001
W	0.000	0.000	0.000	0.000	0.000
Cl	0.009	0.006	0.007	0.006	0.002
Th	0.0011	0.0020	0.0025	0.0019	0.0015
U	0.0000	0.0000	0.0000	0.0000	0.0000
Cs	0.002	0.004	0.002	0.002	0.001
La	0.005	0.006	0.006	0.008	0.002
Ce	0.007	0.008	0.009	0.010	0.003
Ta	0.001	0.002	0.001	0.000	0.001
LOI	0.0000	0.0000	0.0000	0.0000	0.0000
Ga	0.0019	0.0020	0.0022	0.0020	0.0008
Si	26.6	25.7	25.0	20.4	2.87
Ti	0.344	0.368	0.376	0.370	0.066
Cr	0.022	0.023	0.023	0.024	0.0048
V	0.107	0.113	0.117	0.127	0.027
Fe	9.32	6.70	5.61	3.70	0.85
Mn	0.042	0.053	0.061	0.061	0.013
Mg	3.24	3.34	3.42	3.61	0.69
Ca	2.10	3.03	3.42	3.26	0.482
Ba	0.043	0.053	0.055	0.053	0.008
C	0.042	0.362	2.17	17.6	82.6
S	5.93	3.44	2.32	1.44	0.511

CRS Laboratories
REPORT OF XRF-ANALYSES 6.10.2022

Customer : GTK/Tero Korhonen
Order : ID 111503
Method : 180X-0
Date : 06.10.22
Comment : BF BATCircle 2.0M Aitolampi samples 3.10.2022

Sample ZA5-AE

Contents (%)

	ZA5-AE Test 3/Tails 111503-1	ZA5-AE Test 3/CT1 111503-2	ZA5-AE Test 3/CT2 111503-3	ZA5-AE Test 3/CT3 111503-4	ZA5-AE Test 3/CC3 111503-5	ZA5-AE Test 3/M1 111503-6	ZA5-AE Test 3/M2 111503-7
SiO2	66.2	57.7	54.9	25.0	4.40	3.03	40.0
TiO2	0.67	0.67	0.63	0.385	0.083	0.030	0.412
Al2O3	14.8	17.2	17.1	8.75	1.81	0.99	12.3
Cr2O3	0.038	0.038	0.036	0.023	0.0057	0.0077	0.035
V2O3	0.184	0.183	0.170	0.114	0.029	0.011	0.133
FeO	2.44	5.40	6.38	3.18	0.81	69.4	24.2
MnO	0.057	0.080	0.089	0.052	0.013	0.018	0.072
MgO	6.20	5.92	5.33	3.28	0.84	0.39	4.07
CaO	3.40	4.44	4.74	2.61	0.456	0.263	3.55
Rb2O	0.0091	0.011	0.0086	0.0031	0.0013	0.011	0.0072
SrO	0.022	0.026	0.026	0.014	0.0004	0.0000	0.016
BaO	0.055	0.058	0.065	0.034	0.006	0.004	0.035
Na2O	2.21	2.46	2.39	1.03	0.12	0.20	2.27
K2O	2.37	2.50	2.39	1.35	0.295	0.076	1.34
ZrO2	0.021	0.024	0.024	0.015	0.004	0.002	0.013
P2O5	0.200	0.116	0.099	0.034	0.005	0.005	0.054
CO2	0.14	1.85	10.3	146.3	324.4	0.90	6.42
OxSumm	99.70	99.40	99.40	86.90	97.60	92.40	97.40
Cu	0.016	0.59	0.466	0.122	0.020	0.044	0.147
Ni	0.008	0.011	0.014	0.007	0.003	0.297	0.118
Co	0.007	0.009	0.009	0.001	0.001	0.019	0.011
Zn	0.278	0.310	0.257	0.078	0.012	0.028	0.185
Pb	0.006	0.009	0.009	0.011	0.008	0.000	0.005
Ag	0.001	0.002	0.002	0.001	0.000	0.002	0.001
S	0.83	1.71	1.72	0.94	0.329	34.2	13.0
As	0.000	0.000	0.000	0.000	0.000	0.001	0.000
Sb	0.010	0.012	0.011	0.004	0.000	0.009	0.011
Bi	0.002	0.002	0.002	0.003	0.002	0.002	0.003
Te	0.001	0.000	0.001	0.000	0.002	0.000	0.000
Y	0.0043	0.0044	0.0051	0.0029	0.0011	0.0012	0.0042
Nb	0.0021	0.0018	0.0023	0.0037	0.0015	0.0000	0.0000
Mo	0.0032	0.040	0.172	0.241	0.037	0.0000	0.0072
Sn	0.003	0.003	0.003	0.001	0.000	0.000	0.002
W	0.001	0.000	0.001	0.001	0.000	0.001	0.000
Cl	0.010	0.008	0.004	0.004	0.003	0.001	0.006
Th	0.0018	0.0020	0.0028	0.0008	0.0013	0.0000	0.0006
U	0.0000	0.0000	0.0000	0.0000	0.0000	0.0092	0.0011
Cs	0.001	0.003	0.002	0.002	0.001	0.003	0.002
La	0.006	0.007	0.009	0.006	0.002	0.004	0.006
Ce	0.008	0.011	0.009	0.006	0.002	0.000	0.009
Ta	0.001	0.000	0.001	0.000	0.001	0.000	0.000
LOI	0.0000	0.0000	0.0000	0.0000	0.0000	0.0000	0.0000
Ga	0.0025	0.0026	0.0021	0.0017	0.0005	0.0040	0.0016
Si	30.9	27.0	25.7	11.7	2.06	1.42	18.7
Ti	0.403	0.402	0.379	0.231	0.050	0.018	0.247
Cr	0.026	0.026	0.025	0.016	0.0039	0.0053	0.024
V	0.125	0.125	0.116	0.078	0.020	0.0074	0.091
Fe	1.90	4.20	4.96	2.48	0.63	54.0	18.8
Mn	0.044	0.062	0.069	0.040	0.010	0.014	0.056
Mg	3.74	3.57	3.22	1.98	0.51	0.23	2.46
Ca	2.43	3.17	3.39	1.86	0.326	0.188	2.53
Ba	0.049	0.052	0.058	0.030	0.005	0.003	0.031
C	0.039	0.504	2.80	39.90	88.46	0.245	1.75
S	0.752	1.53	1.49	0.920	0.282	37.79	12.56

CRS Laboratories
REPORT OF XRF-ANALYSES 30.1.2023

Customer : GTK/ Tero Korhonen
Order : 117671
Method : 180X-0
Date : 30.1.2023
Comment : BF BATCircle 2.0M 3.1.1-3.1.2 Gra. Ref.

Sample ZA5-AE

Contents (%)

	ZA5-AE Test 4/Tails 117671-1	ZA5-AE Test 4/CT1 117671-2	ZA5-AE Test 4/CT3 117671-3	ZA5-AE Tet 4/CT3 117671-4	ZA5-AE Test 4/CC3 117671-5	ZA5-AE Test 4/M1 117671-6
SiO2	65.9	54.8	51.3	14.0	2.94	5.80
TiO2	0.67	0.65	0.56	0.200	0.057	0.050
Al2O3	14.7	17.2	15.9	4.52	1.04	2.02
Cr2O3	0.040	0.056	0.052	0.020	0.0066	0.0076
V2O3	0.190	0.180	0.143	0.051	0.015	0.020
FeO	2.64	7.00	7.43	2.88	1.04	65.8
MnO	0.061	0.095	0.087	0.032	0.010	0.026
MgO	6.19	5.85	4.77	1.45	0.39	0.71
CaO	3.42	4.38	4.27	1.33	0.288	0.55
Rb2O	0.010	0.011	0.0086	0.0000	0.0009	0.011
SrO	0.022	0.025	0.024	0.0080	0.0004	0.0000
BaO	0.056	0.058	0.055	0.018	0.005	0.005
Na2O	2.16	2.34	2.24	0.50	0.08	0.43
K2O	2.41	2.46	2.09	0.63	0.144	0.166
ZrO2	0.021	0.026	0.024	0.009	0.002	0.003
P2O5	0.196	0.100	0.096	0.023	0.005	0.006
CO2	0.26	8.29	31.5	247.2	333.2	1.28
OxSumm	99.70	99.30	99.40	93.80	97.20	92.70
Cu	0.040	0.52	0.442	0.141	0.034	0.056
Ni	0.008	0.012	0.013	0.006	0.003	0.277
Co	0.008	0.010	0.011	0.003	0.003	0.020
Zn	0.306	0.180	0.166	0.052	0.011	0.039
Pb	0.006	0.008	0.008	0.009	0.008	0.000
Ag	0.001	0.001	0.002	0.001	0.000	0.002
S	0.94	1.56	1.50	0.59	0.312	32.5
As	0.000	0.000	0.000	0.000	0.000	0.001
Sb	0.011	0.011	0.012	0.004	0.001	0.009
Bi	0.002	0.003	0.002	0.002	0.001	0.002
Te	0.000	0.000	0.000	0.000	0.001	0.000
Y	0.0040	0.0043	0.0044	0.0011	0.0009	0.0003
Nb	0.0022	0.0015	0.0016	0.0030	0.0016	0.0000
Mo	0.0052	0.088	0.114	0.091	0.035	0.0000
Sn	0.002	0.004	0.003	0.003	0.001	0.001
W	0.001	0.000	0.001	0.001	0.001	0.001
Cl	0.011	0.006	0.004	0.003	0.003	0.001
Th	0.0012	0.0017	0.0025	0.0002	0.0013	0.0000
U	0.0000	0.0000	0.0000	0.0000	0.0000	0.0089
Cs	0.003	0.002	0.003	0.001	0.001	0.004
La	0.005	0.006	0.005	0.003	0.002	0.001
Ce	0.008	0.009	0.010	0.003	0.002	0.003
Ta	0.001	0.000	0.000	0.000	0.001	0.000
LOI	0.0000	0.0000	0.0000	0.0000	0.0000	0.0000
Ga	0.0014	0.0023	0.0024	0.0008	0.0005	0.0000
Si	30.8	25.6	24.0	6.55	1.37	2.71
Ti	0.401	0.389	0.339	0.120	0.034	0.030
Cr	0.027	0.038	0.036	0.014	0.0045	0.0052
V	0.129	0.123	0.097	0.035	0.010	0.014
Fe	2.05	5.44	5.78	2.24	0.81	51.1
Mn	0.047	0.073	0.067	0.025	0.008	0.020
Mg	3.73	3.53	2.88	0.87	0.24	0.43
Ca	2.45	3.13	3.05	0.95	0.206	0.392
Ba	0.051	0.052	0.050	0.016	0.005	0.005
C	0.070	2.26	8.59	67.4	90.9	0.350
S	0.84	1.43	1.34	0.53	0.27	36.07

CRS Laboratories
Thermo performX XRF results

Batch BatCircle ZA5-AE Test 5
Method X_UQ_3600W Oxides
Template
Report date 3/23/2023
Client GTK Mintec - Tero Korhonen

Sample Name	Client ID	Al2O3	BaO	CaO	Cr2O3	Fe	Fe2O3	K2O	MgO	Mn	MnO
		(%)	(%)	(%)	(%)	(%)	(%)	(%)	(%)	(%)	(%)
		PP-XRF12	PP-XRF12	PP-XRF12	PP-XRF12	PP-XRF12	PP-XRF12	PP-XRF12	PP-XRF12	PP-XRF12	PP-XRF12
124023-17	ZA5-AE Test 5 M1	2.46	< 0.001	0.725	0.009	51.45		0.273	0.918	0.0316	
124023-18	ZA5-AE Test 5 Tails	14.682	0.06	3.271	0.032		2.786	2.692	4.447		0.065
124023-19	ZA5-AE Test 5 CT1	13.104	0.043	3.375	0.055		7.337	2.219	3.416		0.09
124023-20	ZA5-AE Test 5 CT2	13.575	0.042	3.416	0.054		7.384	2.19	3.284		0.088
124023-21	ZA5-AE Test 5 CT3	10.17	0.029	2.741	0.047		6.577	1.678	2.509		0.075
124023-22	ZA5-AE Test 5 CT4	11.013	0.022	2.949	0.053		7.542	1.744	2.611		0.082
124023-23	ZA5-AE Test 5 CC4	1.544	0.007	0.421	0.016		2.553	0.239	0.423		0.022

Sample Name	Client ID	Na2O	P2O5	Rb2O	SiO2	SrO	TiO2	V2O5	ZrO2	Ag	As
		(%)	(%)	(%)	(%)	(%)	(%)	(%)	(%)	(%)	(%)
		PP-XRF12	PP-XRF12	PP-XRF12	PP-XRF12	PP-XRF12	PP-XRF12	PP-XRF12	PP-XRF12	PP-XRF12	PP-XRF12
124023-17	ZA5-AE Test 5 M1	0.784	0.0408	< 0.001	7.39	0.0028	0.0717	0.0293	< 0.001	0.0049	< 0.001
124023-18	ZA5-AE Test 5 Tails	2.529	0.179	0.012	66.455	0.022	0.598	0.227	0.021	< 0.001	< 0.001
124023-19	ZA5-AE Test 5 CT1	1.992	0.079	0.01	43.843	0.02	0.463	0.18	0.022	< 0.001	< 0.001
124023-20	ZA5-AE Test 5 CT2	2.035	0.073	0.01	44.34	0.02	0.462	0.175	0.021	< 0.001	< 0.001
124023-21	ZA5-AE Test 5 CT3	1.528	0.063	0.007	34.259	0.016	0.363	0.136	0.017	< 0.001	< 0.001
124023-22	ZA5-AE Test 5 CT4	1.693	0.069	0.007	37.071	0.017	0.386	0.138	0.017	< 0.001	< 0.001
124023-23	ZA5-AE Test 5 CC4	0.2	0.013	0.001	4.829	0.002	0.066	0.024	0.003	< 0.001	< 0.001

Sample Name	Client ID	Bi	Ce	Cl	Co	Cs	Cu	Dy	Er	Eu	Ga
		(%)	(%)	(%)	(%)	(%)	(%)	(%)	(%)	(%)	(%)
		PP-XRF12	PP-XRF12	PP-XRF12	PP-XRF12	PP-XRF12	PP-XRF12	PP-XRF12	PP-XRF12	PP-XRF12	PP-XRF12
124023-17	ZA5-AE Test 5 M1	< 0.001	< 0.001	0.022	0.0414	< 0.001	0.057	< 0.001	< 0.001	< 0.001	< 0.001
124023-18	ZA5-AE Test 5 Tails	< 0.001	0.006	0.005	0.038	0.001	0.042	< 0.001	< 0.001	< 0.001	0.002
124023-19	ZA5-AE Test 5 CT1	< 0.001	0.004	0.002	0.015	< 0.001	0.454	< 0.001	< 0.001	< 0.001	0.002
124023-20	ZA5-AE Test 5 CT2	< 0.001	0.002	0.001	0.016	< 0.001	0.443	< 0.001	0.001	< 0.001	0.002
124023-21	ZA5-AE Test 5 CT3	< 0.001	0.004	0.002	0.008	< 0.001	0.365	< 0.001	< 0.001	< 0.001	0.002
124023-22	ZA5-AE Test 5 CT4	< 0.001	0.002	0.002	0.021	< 0.001	0.41	< 0.001	< 0.001	< 0.001	0.001
124023-23	ZA5-AE Test 5 CC4	< 0.001	< 0.001	< 0.001	0.005	0.002	0.099	< 0.001	< 0.001	< 0.001	< 0.001

Sample Name	Client ID	Gd	Hf	Ho	La	Lu	Mo	Nb	Nd	Ni	Pb
		(%)	(%)	(%)	(%)	(%)	(%)	(%)	(%)	(%)	(%)
		PP-XRF12	PP-XRF12	PP-XRF12	PP-XRF12	PP-XRF12	PP-XRF12	PP-XRF12	PP-XRF12	PP-XRF12	PP-XRF12
124023-17	ZA5-AE Test 5 M1	0.0375	< 0.001	< 0.001	< 0.001	< 0.001	0.0036	< 0.001	< 0.001	0.288	< 0.001
124023-18	ZA5-AE Test 5 Tails	< 0.001	< 0.001	< 0.001	0.002	< 0.001	0.008	0.001	0.003	0.007	< 0.001
124023-19	ZA5-AE Test 5 CT1	0.002	< 0.001	< 0.001	0.004	< 0.001	0.12	0.001	< 0.001	0.01	0.002
124023-20	ZA5-AE Test 5 CT2	< 0.001	< 0.001	< 0.001	0.002	< 0.001	0.119	0.002	0.002	0.011	0.002
124023-21	ZA5-AE Test 5 CT3	0.002	< 0.001	< 0.001	0.003	< 0.001	0.144	0.001	< 0.001	0.01	0.002
124023-22	ZA5-AE Test 5 CT4	0.002	< 0.001	< 0.001	0.004	< 0.001	0.162	0.002	< 0.001	0.01	0.002
124023-23	ZA5-AE Test 5 CC4	0.001	< 0.001	< 0.001	0.001	< 0.001	0.095	0.002	< 0.001	0.004	< 0.001

Sample Name	Client ID	Pr	S	Sb	Sm	Sn	Ta	Tb	Te	Th	Tm
		(%)	(%)	(%)	(%)	(%)	(%)	(%)	(%)	(%)	(%)
		PP-XRF12	PP-XRF12	PP-XRF12	PP-XRF12	PP-XRF12	PP-XRF12	PP-XRF12	PP-XRF12	PP-XRF12	PP-XRF12
124023-17	ZA5-AE Test 5 M1	< 0.001	< 0.001	< 0.001	< 0.001	< 0.001	< 0.001	< 0.001	< 0.001	< 0.001	< 0.001
124023-18	ZA5-AE Test 5 Tails	< 0.001	1.105	< 0.001	< 0.001	< 0.001	< 0.001	< 0.001	< 0.001	< 0.001	< 0.001
124023-19	ZA5-AE Test 5 CT1	< 0.001	1.423	< 0.001	< 0.001	< 0.001	< 0.001	< 0.001	< 0.001	< 0.001	< 0.001
124023-20	ZA5-AE Test 5 CT2	< 0.001	1.396	< 0.001	< 0.001	< 0.001	< 0.001	< 0.001	0.001	< 0.001	< 0.001
124023-21	ZA5-AE Test 5 CT3	< 0.001	1.17	< 0.001	< 0.001	< 0.001	< 0.001	0.002	< 0.001	< 0.001	< 0.001
124023-22	ZA5-AE Test 5 CT4	< 0.001	1.328	< 0.001	< 0.001	< 0.001	< 0.001	< 0.001	< 0.001	0.001	< 0.001
124023-23	ZA5-AE Test 5 CC4	< 0.001	0.486	< 0.001	0.001	< 0.001	< 0.001	0.003	< 0.001	0.002	< 0.001

Sample Name	Client ID	U	W	Y	Yb	Zn	Sum Before Norm.	Fe*	I	Se	Au
		(%)	(%)	(%)	(%)	(%)	(%)	(%)	(%)	(%)	(%)
		PP-XRF12	PP-XRF12	PP-XRF12	PP-XRF12	PP-XRF12			PP-XRF12	PP-XRF12	PP-XRF12
124023-17	ZA5-AE Test 5 M1	< 0.001	0.0677	< 0.001	< 0.001	0.0381	100.3			0.0431	
124023-18	ZA5-AE Test 5 Tails	< 0.001	0.195	0.006	< 0.001	0.339	107.005	1.949	0.003	0.002	
124023-19	ZA5-AE Test 5 CT1	< 0.001	0.048	0.005	< 0.001	0.157	103.447	5.132		0.003	
124023-20	ZA5-AE Test 5 CT2	< 0.001	0.046	0.005	< 0.001	0.158	104.006	5.165	0.003	0.003	
124023-21	ZA5-AE Test 5 CT3	< 0.001	0.031	0.004	< 0.001	0.133	100.816	4.6		0.002	
124023-22	ZA5-AE Test 5 CT4	< 0.001	0.073	0.005	< 0.001	0.141	102.181	5.275		0.002	
124023-23	ZA5-AE Test 5 CC4	< 0.001	0.019	0.001	< 0.001	0.027	99.612	1.786	0.003	0.001	

Sample Name	Client ID	Re	Cd	F	Rh	Ru	Sc	Ar	Pt	Eltra C	Leco S
		(%)	(%)	(%)	(%)	(%)	(%)	(%)	(%)	(%)	(%)
		PP-XRF12	PP-XRF12	PP-XRF12	PP-XRF12	PP-XRF12	PP-XRF12	PP-XRF12	PP-XRF12		
124023-17	ZA5-AE Test 5 M1		0.0017		0.0024			0.0085		0.23	34.92
124023-18	ZA5-AE Test 5 Tails	0.002	0.004	0.139	0.001	0.002	0.001			0.01	0.77
124023-19	ZA5-AE Test 5 CT1		0.001							21.5	1.07
124023-20	ZA5-AE Test 5 CT2		0.001	0.044						20.58	1.08
124023-21	ZA5-AE Test 5 CT3									37.9	0.85
124023-22	ZA5-AE Test 5 CT4	0.002								32.42	1
124023-23	ZA5-AE Test 5 CC4									88.9	0.34

CRS Laboratories
Thermo PerformX XRF results

Batch	BF BatCircle 2, Aitolampi ZA5-AE, Test 6
Method	X_UQ_3600W Oxides, X_UQ_3600W Sulphides
Report date	15.6.2023
Client	GTK / Tero Korhonen
Notes	

Lab ID	Client ID	C	S	Al2O3	BaO	CaO	Cr2O3	Fe	Fe2O3	K2O	MgO	Mn
		(%)	(%)	(%)	(%)	(%)	(%)	(%)	(%)	(%)	(%)	(%)
		CA-C	CA-S	PP-XRF12	PP-XRF12	PP-XRF12	PP-XRF12	PP-XRF12	PP-XRF12	PP-XRF12	PP-XRF12	PP-XRF12
129198-1	ZA5-AE Test 6/M	0.63	33.58	3.150	< 0.001	0.876	0.010	47.680		0.405	1.150	0.029
129198-2	ZA5-AE Test 6/Tails	0.05	0.95	14.410	0.047	3.450	0.033	2.090	2.990	2.720	4.740	0.054
129198-3	ZA5-AE Test 6/CT1	19.21	1.11	13.893	0.047	3.491	0.055	5.616	8.029	2.267	3.383	
129198-4	ZA5-AE Test 6/CT2	31.46	0.90	11.404	0.046	3.008	0.047	5.028	7.188	1.876	2.792	
129198-5	ZA5-AE Test 6/CT3	37.34	0.88	10.34	0.038	2.766	0.045	4.833	6.909	1.686	2.509	
129198-6	ZA5-AE Test 6/CT4	61.00	0.60	6.253	0.027	1.73	0.033	3.677	5.257	1.023	1.494	
129198-7	ZA5-AE Test 6/CT5	75.68	0.43	3.735	0.02	1.046	0.025	2.932	4.192	0.604	0.911	
129198-8	ZA5-AE Test 6/CC5	86.52	0.34	1.944	0.008	0.522	0.017	2.17	3.102	0.299	0.515	

Lab ID	Client ID	MnO	Na2O	P2O5	Rb2O	SiO2	SrO	TiO2	V2O5	ZrO2	Ag	As
		(%)	(%)	(%)	(%)	(%)	(%)	(%)	(%)	(%)	(%)	(%)
		PP-XRF12	PP-XRF12	PP-XRF12	PP-XRF12	PP-XRF12	PP-XRF12	PP-XRF12	PP-XRF12	PP-XRF12	PP-XRF12	PP-XRF12
129198-1	ZA5-AE Test 6/M		0.900	0.048	< 0.001	10.680	0.004	0.097	0.041	0.002	0.004	< 0.001
129198-2	ZA5-AE Test 6/Tails	0.070	2.710	0.190	0.012	65.570	0.023	0.626	0.232	0.022	< 0.001	< 0.001
129198-3	ZA5-AE Test 6/CT1	0.096	2.053	0.078	0.01	44.724	0.02	0.481	0.186	0.022	< 0.001	< 0.001
129198-4	ZA5-AE Test 6/CT2	0.083	1.759	0.07	0.008	38.018	0.018	0.4	0.149	0.019	< 0.001	< 0.001
129198-5	ZA5-AE Test 6/CT3	0.079	1.58	0.059	0.007	34.506	0.017	0.368	0.134	0.018	< 0.001	< 0.001
129198-6	ZA5-AE Test 6/CT4	0.055	0.916	0.041	0.005	20.66	0.011	0.233	0.085	0.012	< 0.001	< 0.001
129198-7	ZA5-AE Test 6/CT5	0.04	0.527	0.026	0.003	12.087	0.007	0.146	0.053	0.007	< 0.001	< 0.001
129198-8	ZA5-AE Test 6/CC5	0.028	0.257	0.016	0.001	6.023	0.003	0.077	0.029	0.003	< 0.001	< 0.001

Lab ID	Client ID	Bi	Ce	Cl	Co	Cs	Cu	Dy	Er	Eu	Ga	Gd
		(%)	(%)	(%)	(%)	(%)	(%)	(%)	(%)	(%)	(%)	(%)
		PP-XRF12	PP-XRF12	PP-XRF12	PP-XRF12	PP-XRF12	PP-XRF12	PP-XRF12	PP-XRF12	PP-XRF12	PP-XRF12	PP-XRF12
129198-1	ZA5-AE Test 6/M	< 0.001	< 0.001	0.022	0.058	< 0.001	0.055	< 0.001	< 0.001	< 0.001	< 0.001	0.036
129198-2	ZA5-AE Test 6/Tails	< 0.001	0.005	0.005	0.059	< 0.001	0.045	< 0.001	< 0.001	< 0.001	0.001	< 0.001
129198-3	ZA5-AE Test 6/CT1	< 0.001	0.005	0.002	0.021	< 0.001	0.444	< 0.001	0.001	< 0.001	0.002	< 0.001
129198-4	ZA5-AE Test 6/CT2	< 0.001	0.002	0.003	0.023	< 0.001	0.362	< 0.001	0.003	< 0.001	0.002	0.002
129198-5	ZA5-AE Test 6/CT3	< 0.001	0.003	0.002	0.02	< 0.001	0.335	< 0.001	< 0.001	< 0.001	0.001	0.001
129198-6	ZA5-AE Test 6/CT4	< 0.001	0.003	0.001	0.013	0.002	0.247	< 0.001	0.001	< 0.001	< 0.001	0.002
129198-7	ZA5-AE Test 6/CT5	< 0.001	0.002	< 0.001	0.014	0.004	0.189	< 0.001	< 0.001	< 0.001	< 0.001	0.002
129198-8	ZA5-AE Test 6/CC5	< 0.001	0.002	< 0.001	0.01	0.002	0.127	< 0.001	< 0.001	< 0.001	< 0.001	0.001

Lab ID	Client ID	Hf	Ho	La	Lu	Mo	Nb	Nd	Ni	Pb	Pr	S
		(%)	(%)	(%)	(%)	(%)	(%)	(%)	(%)	(%)	(%)	(%)
		PP-XRF12	PP-XRF12	PP-XRF12	PP-XRF12	PP-XRF12	PP-XRF12	PP-XRF12	PP-XRF12	PP-XRF12	PP-XRF12	PP-XRF12
129198-1	ZA5-AE Test 6/M	< 0.001	< 0.001	< 0.001	< 0.001	0.006	< 0.001	< 0.001	0.268	< 0.001	< 0.001	< 0.001
129198-2	ZA5-AE Test 6/Tails	< 0.001	< 0.001	0.002	< 0.001	0.007	0.001	0.002	0.006	< 0.001	< 0.001	< 0.001
129198-3	ZA5-AE Test 6/CT1	< 0.001	< 0.001	0.003	< 0.001	0.128	0.002	0.003	0.01	0.002	< 0.001	< 0.001
129198-4	ZA5-AE Test 6/CT2	< 0.001	< 0.001	0.004	< 0.001	0.135	0.002	< 0.001	0.009	0.001	< 0.001	< 0.001
129198-5	ZA5-AE Test 6/CT3	< 0.001	< 0.001	0.003	< 0.001	0.146	0.002	< 0.001	0.009	0.002	< 0.001	< 0.001
129198-6	ZA5-AE Test 6/CT4	< 0.001	< 0.001	0.003	< 0.001	0.149	0.002	0.001	0.007	0.002	< 0.001	< 0.001
129198-7	ZA5-AE Test 6/CT5	< 0.001	< 0.001	0.002	< 0.001	0.146	0.002	< 0.001	0.005	0.001	< 0.001	< 0.001
129198-8	ZA5-AE Test 6/CC5	< 0.001	< 0.001	0.002	< 0.001	0.086	0.002	< 0.001	0.004	0.001	< 0.001	< 0.001

Lab ID	Client ID	Sb	Sm	Sn	Ta	Tb	Te	Th	Tm	U	W	Y
		(%)	(%)	(%)	(%)	(%)	(%)	(%)	(%)	(%)	(%)	(%)
		PP-XRF12	PP-XRF12	PP-XRF12	PP-XRF12	PP-XRF12	PP-XRF12	PP-XRF12	PP-XRF12	PP-XRF12	PP-XRF12	PP-XRF12
129198-1	ZA5-AE Test 6/M	< 0.001	< 0.001	< 0.001	< 0.001	< 0.001	< 0.001	< 0.001	< 0.001	< 0.001	0.102	< 0.001
129198-2	ZA5-AE Test 6/Tails	< 0.001	< 0.001	< 0.001	< 0.001	< 0.001	< 0.001	< 0.001	< 0.001	< 0.001	0.254	0.004
129198-3	ZA5-AE Test 6/CT1	< 0.001	< 0.001	< 0.001	< 0.001	< 0.001	0.001	< 0.001	< 0.001	< 0.001	0.058	0.005
129198-4	ZA5-AE Test 6/CT2	< 0.001	< 0.001	< 0.001	< 0.001	< 0.001	< 0.001	< 0.001	< 0.001	< 0.001	0.069	0.005
129198-5	ZA5-AE Test 6/CT3	< 0.001	< 0.001	< 0.001	< 0.001	< 0.001	< 0.001	< 0.001	< 0.001	< 0.001	0.063	0.004
129198-6	ZA5-AE Test 6/CT4	< 0.001	< 0.001	< 0.001	< 0.001	0.002	< 0.001	0.001	< 0.001	< 0.001	0.045	0.003
129198-7	ZA5-AE Test 6/CT5	< 0.001	< 0.001	< 0.001	< 0.001	0.002	< 0.001	0.002	< 0.001	< 0.001	0.036	0.002
129198-8	ZA5-AE Test 6/CC5	< 0.001	0.001	< 0.001	< 0.001	0.003	< 0.001	0.002	< 0.001	< 0.001	0.032	0.001

Lab ID	Client ID	Yb	Zn	Sum Before Norm.	I	Se	Cd	F	Ar	Rh
		(%)	(%)	(%)	(%)	(%)	(%)	(%)	(%)	(%)
		PP-XRF12	PP-XRF12							
129198-1	ZA5-AE Test 6/M	< 0.001	0.044	101.7		0.039				
129198-2	ZA5-AE Test 6/Tails	< 0.001	0.292	102.4		0.002				
129198-3	ZA5-AE Test 6/CT1	< 0.001	0.16	102.8	0.003	0.003	0.001	0.022		
129198-4	ZA5-AE Test 6/CT2	< 0.001	0.137	101.6		0.002	0.001			
129198-5	ZA5-AE Test 6/CT3	< 0.001	0.128	100.9		0.002				
129198-6	ZA5-AE Test 6/CT4	< 0.001	0.086	98.9	0.002	0.002				
129198-7	ZA5-AE Test 6/CT5	< 0.001	0.057	98.3	0.003	0.002				
129198-8	ZA5-AE Test 6/CC5	< 0.001	0.031	98.9	0.003	0.001				

Crs laboratories
REPORT OF XRF-ANALYSES 23.8.2022

Customer : Gtk Tero Korhonen
Order : ID 107929
Method : 180X-0
Date : 23.08.2022
Comment : BF BatCircle 2.0M 3.1.1-3.1.2 Aitolampi samples

	Sample YA4-AE				
	YA4-AE	YA4-AE	YA4-AE	YA4-AE	YA4-AE
	Test 1/ RC1	Test 1/ RC2	Test 1/ RC3	Test 1/ RC4	Test 1/Tails
	107929-6	107929-7	107929-8	107929-9	107929-10
SiO2	29.9	60.7	60.0	60.9	63.5
TiO2	0.353	0.57	0.59	0.59	0.60
Al2O3	9.03	15.5	15.5	15.4	13.2
Cr2O3	0.010	0.015	0.017	0.018	0.014
V2O3	0.030	0.039	0.039	0.040	0.038
FeO	4.33	7.18	7.87	7.78	8.64
MnO	0.034	0.043	0.047	0.048	0.041
MgO	2.81	3.68	3.60	3.69	3.54
CaO	1.16	2.12	2.16	2.19	2.02
Rb2O	0.0044	0.0097	0.0082	0.0085	0.0060
SrO	0.012	0.022	0.022	0.021	0.019
BaO	0.043	0.074	0.076	0.072	0.053
Na2O	1.33	3.24	3.26	3.24	2.97
K2O	1.71	2.69	2.66	2.54	1.97
ZrO2	0.017	0.025	0.026	0.025	0.025
P2O5	0.066	0.131	0.135	0.137	0.147
CO2	156.0	4.62	2.41	1.62	0.42
OxSumm	94.10	99.20	99.10	99.10	99.20
Cu	0.009	0.167	0.390	0.191	0.007
Ni	0.007	0.019	0.024	0.023	0.021
Co	0.001	0.011	0.017	0.017	0.007
Zn	0.010	0.021	0.030	0.037	0.027
Pb	0.007	0.009	0.010	0.008	0.005
Ag	0.000	0.001	0.002	0.000	0.001
S	1.22	3.13	3.58	3.28	4.13
As	0.000	0.000	0.000	0.000	0.000
Sb	0.009	0.011	0.012	0.010	0.011
Bi	0.002	0.002	0.002	0.003	0.002
Te	0.002	0.000	0.001	0.001	0.000
Y	0.0020	0.0023	0.0032	0.0026	0.0027
Nb	0.0014	0.0009	0.0012	0.0017	0.0015
Mo	0.017	0.010	0.0059	0.0035	0.0000
Sn	0.002	0.003	0.003	0.003	0.003
W	0.000	0.001	0.001	0.000	0.000
Cl	0.003	0.005	0.004	0.004	0.006
Th	0.0010	0.0015	0.0019	0.0014	0.0019
U	0.0000	0.0000	0.0000	0.0000	0.0000
Cs	0.001	0.001	0.002	0.001	0.002
La	0.005	0.005	0.006	0.005	0.005
Ce	0.007	0.008	0.008	0.008	0.007
Ta	0.002	0.000	0.001	0.000	0.002
LOI	0.0000	0.0000	0.0000	0.0000	0.0000
Ga	0.0016	0.0011	0.0019	0.0018	0.0013
Si	14.0	28.4	28.0	28.5	29.7
Ti	0.211	0.343	0.354	0.352	0.363
Cr	0.0070	0.011	0.012	0.012	0.0098
V	0.020	0.027	0.027	0.027	0.026
Fe	3.37	5.58	6.12	6.05	6.72
Mn	0.027	0.034	0.036	0.037	0.032
Mg	1.70	2.22	2.17	2.22	2.14
Ca	0.83	1.52	1.54	1.56	1.44
Ba	0.038	0.066	0.068	0.064	0.048
C	42.5	1.26	0.66	0.441	0.114
S	1.45	2.99	3.34	3.11	3.93

CRS Laboratories
REPORT OF XRF-ANALYSES 8.9.2022

Customer : Tero Korhonen GTK
Order : ID 108839
Method : 180X-0
Date : 08092022
Comment : BF BATCircle 2.0M 3.1.1-3.1.2 GRA. Ref. 1.9.2022 aitolampi samples

Sample YA4-AE

Contents (%)

	YA4-AE Test 2/Tails 108839-1	YA4-AE Test 2/CT1 108839-2	YA4-AE Test 2/CT2 108839-3	YA4-AE Test 2/CT3 108839-4	YA4-AE Test 2/CC3 108839-5
SiO2	63.4	60.0	56.4	24.1	5.84
TiO2	0.61	0.58	0.65	0.409	0.106
Al2O3	13.3	15.6	16.3	9.15	2.64
Cr2O3	0.016	0.017	0.019	0.016	0.0047
V2O3	0.039	0.041	0.048	0.043	0.015
FeO	8.66	8.67	9.18	4.85	2.01
MnO	0.039	0.060	0.068	0.050	0.020
MgO	3.45	3.73	4.31	3.60	1.30
CaO	2.05	2.21	2.08	1.03	0.214
Rb2O	0.0065	0.0088	0.011	0.0067	0.0000
SrO	0.018	0.021	0.020	0.011	0.0027
BaO	0.053	0.069	0.076	0.043	0.011
Na2O	2.97	3.18	2.89	0.98	0.14
K2O	1.97	2.69	3.04	1.91	0.500
ZrO2	0.025	0.027	0.028	0.016	0.007
P2O5	0.153	0.134	0.122	0.053	0.012
CO2	0.41	1.43	7.77	114.4	316.5
OxSumm	99.10	99.10	99.00	78.10	99.40
Cu	0.008	0.123	0.152	0.056	0.005
Ni	0.021	0.018	0.017	0.006	0.003
Co	0.005	0.008	0.014	0.001	0.001
Zn	0.025	0.021	0.021	0.007	0.003
Pb	0.005	0.010	0.011	0.008	0.007
Ag	0.002	0.001	0.001	0.000	0.000
S	4.22	2.78	2.56	0.82	0.289
As	0.000	0.000	0.000	0.000	0.000
Sb	0.009	0.011	0.012	0.006	0.002
Bi	0.003	0.002	0.002	0.002	0.001
Te	0.000	0.000	0.001	0.004	0.001
Y	0.0021	0.0034	0.0034	0.0025	0.0004
Nb	0.0014	0.0013	0.0014	0.0016	0.0013
Mo	0.0000	0.0073	0.031	0.043	0.014
Sn	0.002	0.003	0.004	0.001	0.002
W	0.001	0.001	0.001	0.001	0.001
Cl	0.004	0.005	0.004	0.005	0.002
Th	0.0014	0.0019	0.0027	0.0005	0.0012
U	0.0000	0.0000	0.0000	0.0000	0.0000
Cs	0.001	0.002	0.002	0.001	0.001
La	0.004	0.006	0.006	0.005	0.002
Ce	0.007	0.008	0.012	0.007	0.003
Ta	0.000	0.000	0.001	0.001	0.000
LOI	0.0000	0.0000	0.0000	0.0000	0.0000
Ga	0.0015	0.0015	0.0023	0.0017	0.0006
Si	29.6	28.0	26.4	11.3	2.73
Ti	0.363	0.350	0.388	0.246	0.064
Cr	0.011	0.011	0.013	0.011	0.0032
V	0.026	0.028	0.033	0.029	0.010
Fe	6.74	6.74	7.14	3.77	1.56
Mn	0.030	0.047	0.053	0.039	0.016
Mg	2.08	2.25	2.60	2.17	0.78
Ca	1.46	1.58	1.48	0.74	0.153
Ba	0.048	0.062	0.068	0.039	0.010
C	0.112	0.389	2.12	31.2	86.3
S	3.695	2.61	2.39	1.12	0.305

CRS Laboratories
REPORT OF XRF-ANALYSES 7.10.2022

Customer : Gtk Tero Korhonen
Order : ID 111762
Method : 180X-0
Date : 07.10.2022
Comment : BF BATCircle 2.0 M 3.1.1-3.1.2 GRA. Ref. 5.10.2022

Sample YA4-AE

Contents (%)

	YA4-AE	YA4-AE	YA4-AE	YA4-AE	YA4-AE	YA4-AE	YA4-AE
	Test 3/Tails	Test 3/CT1	Test 3/CT2	Test 3/CT3	Test 3/CC3	Test 3/M1	Test 3/M2
	111762-1	111762-2	111762-3	111762-4	111762-5	111762-6	111762-7
SiO2	68.3	60.9	56.8	16.7	4.41	7.35	25.7
TiO2	0.66	0.60	0.64	0.311	0.082	0.075	0.404
Al2O3	14.2	16.1	15.9	6.57	2.05	1.74	7.04
Cr2O3	0.015	0.018	0.019	0.012	0.0042	0.011	0.018
V2O3	0.040	0.042	0.047	0.033	0.011	0.0079	0.016
FeO	3.78	7.50	8.69	3.96	1.64	65.7	44.4
MnO	0.037	0.063	0.077	0.041	0.017	0.044	0.056
MgO	3.77	3.89	4.10	2.60	1.00	0.51	1.40
CaO	2.21	2.18	2.11	0.66	0.148	0.243	1.11
Rb2O	0.0060	0.0083	0.0096	0.0000	0.0014	0.012	0.0095
SrO	0.020	0.022	0.020	0.0021	0.0000	0.0000	0.0046
BaO	0.057	0.071	0.075	0.028	0.007	0.008	0.023
Na2O	3.14	3.19	2.89	0.66	0.10	0.47	2.01
K2O	2.14	2.74	2.87	1.29	0.377	0.193	0.72
ZrO2	0.027	0.027	0.027	0.008	0.004	0.006	0.020
P2O5	0.164	0.137	0.150	0.039	0.011	0.017	0.074
CO2	0.29	1.14	8.29	201.0	325.1	1.41	2.73
OxSumm	99.60	99.20	98.00	88.20	98.70	92.80	95.20
Cu	0.003	0.134	0.142	0.046	0.006	0.024	0.033
Ni	0.008	0.014	0.015	0.006	0.003	0.155	0.125
Co	0.007	0.009	0.003	0.002	0.002	0.011	0.005
Zn	0.023	0.044	0.041	0.009	0.003	0.009	0.019
Pb	0.006	0.007	0.010	0.015	0.008	0.000	0.001
Ag	0.001	0.002	0.001	0.000	0.000	0.002	0.001
S	1.47	2.07	1.81	0.63	0.272	31.5	22.4
As	0.000	0.000	0.000	0.000	0.000	0.002	0.000
Sb	0.012	0.010	0.009	0.001	0.000	0.008	0.009
Bi	0.003	0.002	0.002	0.004	0.002	0.002	0.002
Te	0.000	0.000	0.004	0.002	0.002	0.000	0.000
Y	0.0029	0.0034	0.0041	0.0035	0.0011	0.0000	0.0024
Nb	0.0019	0.0019	0.0028	0.0028	0.0012	0.0000	0.0000
Mo	0.0000	0.0065	0.033	0.026	0.0087	0.0000	0.0000
Sn	0.003	0.003	0.003	0.001	0.000	0.001	0.002
W	0.001	0.001	0.000	0.000	0.001	0.001	0.001
Cl	0.007	0.003	0.002	0.007	0.002	0.004	0.001
Th	0.0011	0.0023	0.0016	0.0027	0.0017	0.0036	0.0029
U	0.0000	0.0000	0.0000	0.0000	0.0000	0.0088	0.0045
Cs	0.003	0.003	0.002	0.001	0.000	0.003	0.002
La	0.005	0.007	0.005	0.004	0.002	0.003	0.008
Ce	0.007	0.010	0.009	0.006	0.003	0.003	0.009
Ta	0.001	0.000	0.000	0.000	0.001	0.000	0.000
LOI	0.0000	0.0000	0.0000	0.0000	0.0000	0.0000	0.0000
Ga	0.0014	0.0017	0.0021	0.0013	0.0006	0.0026	0.0023
Si	31.9	28.5	26.6	7.82	2.06	3.44	12.0
Ti	0.396	0.357	0.381	0.187	0.049	0.045	0.242
Cr	0.011	0.013	0.013	0.0085	0.0029	0.0077	0.012
V	0.027	0.029	0.032	0.023	0.0077	0.0054	0.011
Fe	2.94	5.84	6.76	3.08	1.28	51.1	34.5
Mn	0.028	0.049	0.059	0.032	0.013	0.034	0.044
Mg	2.27	2.34	2.47	1.57	0.60	0.31	0.84
Ca	1.58	1.55	1.51	0.474	0.106	0.174	0.79
Ba	0.051	0.064	0.067	0.025	0.007	0.007	0.020
C	0.078	0.310	2.26	54.8	88.7	0.386	0.74
S	1.44	1.99	1.99	0.8259	0.2716	23.73	24.03

Analysis Report

Client:	GTK Mintec	**Report ID:**	OR1676
	Att: Tero Korhonen	**Reference / batch ID:**	BatCircle 9/2022 4A-ICP
		Date received:	24.8.-26.9.2022
		Sample type:	Pulverized rock
		Number of samples:	79
		Report Date:	5.10.2023

Analytical method(s):

4A-ICP	Four acid digestion and multielement analysis with ICP-OES

Laboratory location:	Outokumpu, Finland
Notes:	Some of the samples contained high concentrations of carbon which is not compatible with 4A-ICP analysis. The analysis was changed to AR-ICP and these samples were reported separately. These samples were included into this report for clarity.

CRS Laboratories Oy
Tutkijankatu 1, 83500 Outokumpu, FINLAND
outokumpu@crs.fi
www.crs.fi

Reported by:
Terhi Kirkkala
Chemist

Analysis Order Headline	Lab-ID	Analyte Unit Symbol Analysis Method	Ag mg/kg 4A-ICP10	Al mg/kg 4A-ICP10	As mg/kg 4A-ICP10	Ca mg/kg 4A-ICP10	Cd mg/kg 4A-ICP10	Co mg/kg 4A-ICP10
BatCircle XA3-AE Test 1 (3) 15.8	107245-1	XA3-AE Test 1/RC1	<3	49065	4	11347	<1	6
	107245-2	XA3-AE Test 1/RC2	4	78749	<5	21012	2	13
	107245-3	XA3-AE Test 1/RC3	7	75480	<5	20769	3	15
	107245-4	XA3-AE Test 1/RC4	9	74504	<5	20548	4	16
	107245-5	XA3-AE Test 1/Tails	<3	61164	<5	17366	4	22
BatCircle 2.0 M 3.1.1-3.1.2 GRA.	107700-1	QA2-AE Test1/ RC1	<3	50943	4	13338	4	11
	107700-2	QA2-AE Test1/ RC2	4	61511	6	16993	8	13
	107700-3	QA2-AE Test1/ RC3	16	79918	<5	23256	16	22
	107700-4	QA2-AE Test1/ RC4	14	78905	<5	22672	25	23
	107700-5	QA2-AE Test1/ Tails	<3	66115	<5	19587	20	27
BF BATCircle2 Aitolampi samples	107745-1	PA1-AC1 Test1/RC1	<3	56574	3	20972	8	12
	107745-2	PA1-AC1 Test1/RC2	6	81469	<5	30516	19	22
	107745-3	PA1-AC1 Test1/RC3	13	79822	<5	29732	28	25
	107745-4	PA1-AC1 Test1/RC4	10	79398	<5	29548	36	26
	107745-5	PA1-AC1 Test1/Tails	<3	59833	<5	23209	34	36
BF BATCircle2.0 M 3.1.1-3.1.2 GR	107929-1	ZA5-AE Test1/RC1						
	107929-2	ZA5-AE Test1/RC2	11	80840	8	28841	15	17
	107929-3	ZA5-AE Test1/RC3	32	80363	7	27268	32	27
	107929-4	ZA5-AE Test1/RC4	17	79799	<5	26519	40	29
	107929-5	ZA5-AE Test1/Tails	<3	64258	<5	20886	34	34
	107929-6	YA4-AE Test1/RC1						
	107929-7	YA4-AE Test1/RC2	<3	36711	<5	7386	<1	9
	107929-8	YA4-AE Test1/RC3	10	69985	7	14891	1	19
	107929-9	YA4-AE Test1/RC4	6	73179	8	15170	2	17
	107929-10	YA4-AE Test1/Tails	<3	63975	6	14201	1	17

Analysis Order Headline	Lab-ID	Analyte Unit Symbol Analysis Method	Ag mg/kg 4A-ICP10	Al mg/kg 4A-ICP10	As mg/kg 4A-ICP10	Ca mg/kg 4A-ICP10	Cd mg/kg 4A-ICP10	Co mg/kg 4A-ICP10
BatCircle XA3-AE Test 2	108147-1	XA3-AE Test2/Tails	<3	61178	<5	16500	4	22
	108147-2	XA3-AE Test2/CT1	<3	74119	14	20286	3	15
	108147-3	XA3-AE Test2/CT2	<3	81973	14	21099	2	14
	108147-4	XA3-AE Test2/CT3	<3	73825	6	16859	<1	5
	108147-5	XA3-AE Test2/CC3						
BatCircle QA2-AE Test 2	108143-1	QA2-AE Test2/ Tails	<3	64983	<5	18663	21	27
	108143-2	QA2-AE Test2/ CT1	4	77738	<5	22298	15	22
	108143-3	QA2-AE Test2/ CT2	4	84629	<5	23853	11	18
	108143-4	QA2-AE Test2/ CT3	<3	75787	<5	20893	5	10
BF BATCircle20 M 3.1.1-3.1.2.GR	108244-1	PA1-AE1 Test2/Tails	<3	62277	<5	23066	35	39
	108244-2	PA1-AE1 Test2/CT1	5	84127	7	30780	23	25
	108244-3	PA1-AE1 Test2/CT2	4	89935	6	34030	17	20
	108244-4	PA1-AE1 Test2/CT3	3	83139	6	31523	10	14
BatCircle ZA5-AE Test 2 290822	108514-1	ZA5-AE Test2/Tails	<3	65647	<5	21765	34	36
	108514-2	ZA5-AE Test2/CT1	11	84894	8	30531	25	24
	108514-3	ZA5-AE Test2/CT2	9	90667	12	34233	18	19
	108514-4	ZA5-AE Test2/CT3	4	83053	10	31850	9	11
	108514-5	ZA5-AE Test2/CC3						
BatCircle YA4-AE Test 2	108839-1	YA4-AE Test2/Tails	<3	65678	<5	14728	<1	18
	108839-2	YA4-AE Test2/CT1	3	68940	5	15810	<1	16
	108839-3	YA4-AE Test2/CT2	4	78925	6	14701	<1	15
	108839-4	YA4-AE Test2/CT3						
	108839-5	YA4-AE Test2/CC3						
BF BATCircle2.0 M 3.1.1-3.1.2 GR	109330-1	XA3-AE LIMS M	<3	10400	<5	3988	3	120
	109330-2	XA3-AE MIMS M	<3	46439	<5	13358	3	56
	109330-3	XA3-AE MIMS NM	<3	69339	<5	18463	3	9

Analysis Order Headline	Lab-ID	Analyte Unit Symbol Analysis Method	Ag mg/kg 4A-ICP10	Al mg/kg 4A-ICP10	As mg/kg 4A-ICP10	Ca mg/kg 4A-ICP10	Cd mg/kg 4A-ICP10	Co mg/kg 4A-ICP10
	109330-4	QA2-AE LIMS M	<3	3921	<5	1395	5	161
	109330-5	QA2-AE MIMS M	<3	43407	<5	16120	21	86
	109330-6	QA2-AE MIMS NM	<3	70830	<5	19856	21	15
	109330-7	PA1-AE1 LIMS M	<3	4366	<5	1538	6	112
	109330-8	PA1-AE1 MIMS M	<3	57434	<5	23086	35	60
	109330-9	PA1-AE1 MIMS NM	<3	66815	6	24364	33	23
	109330-10	ZA5-AE LIMS M	5	4416	<5	1861	5	161
	109330-11	ZA5-AE MIMS M	7	55489	<5	23183	31	70
	109330-12	ZA5-AE MIMS NM	4	70078	<5	22537	32	16
	109330-13	YA4-AE LIMS M	3	4335	<5	1121	3	125
	109330-14	YA4-AE MIMS M	4	43542	<5	9617	2	51
	109330-15	YA4-AE MIMS NM	<3	69679	<5	14699	1	11
BatCircle XA3-AE Test 3	110931-1	XA3-AE Test3/Tails	5	68168	<5	18265	3	8
	110931-2	XA3-AE Test3/CT1	8	82204	11	21461	7	11
	110931-3	XA3-AE Test3/CT2	9	82700	12	20633	7	10
	110931-4	XA3-AE Test3/CT3	6	66031	13	15222	2	5
	110931-5	XA3-AE Test3/CC3	5	53121	8	8829	<1	3
	110931-6	XA3-AE Test3/M1	4	7211	<5	1935	2	100
	110931-7	XA3-AE Test3/M2	5	51405	7	14090	4	44

Analyte	Cr	Cu	Fe	K	Li	Mg	Mn	Mo	Na
Unit Symbol	mg/kg	mg/kg	mg/kg	mg/kg	mg/kg	mg/kg	mg/kg	mg/kg	mg/kg
Analysis Method	4A-ICP10	4A-ICP10	4A-ICP10	4A-ICP10	4A-ICP10	4A-ICP10	4A-ICP10	4A-ICP10	4A-ICP10
XA3-AE Test1/ RC1	51	124	26574	14794	9	10587	294	279	12885
XA3-AE Test1/RC2	84	1544	52104	23292	16	16458	498	370	22799
XA3-AE Test 1/RC3	70	3097	57803	22490	17	16880	525	163	22563
XA3-AE Test 1/RC4	72	2672	61640	21882	20	17533	563	90	22159
XA3-AE Test 1/Tails	62	89	90673	16316	14	15553	424	9	18465
QA2-AE Test1/ RC1	95	331	40723	15254	13	16436	374	474	9684
QA2-AE Test1/ RC2	97	721	48955	19122	16	19316	450	913	12608
QA2-AE Test1/ RC3	117	10875	77084	24480	19	23626	546	623	17300
QA2-AE Test1/ RC4	110	3963	73516	24464	20	25314	598	325	17043
QA2-AE Test1/ Tails	115	159	85456	20334	17	21419	496	26	15422
PA1-AC1 Test1/RC1	120	478	35502	16936	14	18671	420	434	8903
PA1-AC1 Test1/RC2	171	5524	63129	22351	20	27105	602	1064	13872
PA1-AC1 Test1/RC3	145	14833	76549	24203	20	28263	636	480	13976
PA1-AC1 Test1/RC4	132	7113	73002	24891	22	29365	673	291	13943
PA1-AC1 Test1/Tails	116	288	67443	19142	19	25152	542	30	11950
ZA5-AE Test1/RC1									
ZA5-AE Test1/RC2	186	6252	45401	22076	18	23978	561	1392	16693
ZA5-AE Test1/RC3	147	24088	73139	23019	19	25982	612	640	16888
ZA5-AE Test1/RC4	153	7081	68042	23073	19	27016	641	312	16899
ZA5-AE Test1/Tails	142	283	93647	19872	15	23788	514	29	14649
YA4-AE Test1/RC1									
YA4-AE Test1/RC2	25	853	27224	12850	7	7944	215	94	11690
YA4-AE Test1/RC3	67	3863	58637	25426	17	16029	465	65	23170
YA4-AE Test1/RC4	64	1918	58826	24438	18	16782	486	36	22909
YA4-AE Test1/Tails	64	67	65696	18976	15	15166	393	6	20992

Analyte	Cr	Cu	Fe	K	Li	Mg	Mn	Mo	Na
Unit Symbol	mg/kg	mg/kg	mg/kg	mg/kg	mg/kg	mg/kg	mg/kg	mg/kg	mg/kg
Analysis Method	4A-ICP10	4A-ICP10	4A-ICP10	4A-ICP10	4A-ICP10	4A-ICP10	4A-ICP10	4A-ICP10	4A-ICP10
XA3-AE Test2/Tails	72	72	88471	16172	12	15189	415	9	18123
XA3-AE Test2/CT1	73	1410	64782	21816	13	14850	572	127	22725
XA3-AE Test2/CT2	112	1020	55373	26319	15	16980	648	669	22022
XA3-AE Test2/CT3	108	354	30252	26727	16	19209	581	963	16931
XA3-AE Test2/CC3									
QA2-AE Test2/ Tails	116	158	82267	20143	15	21052	486	31	15120
QA2-AE Test2/ CT1	118	3249	77885	23284	16	22581	634	314	16920
QA2-AE Test2/ CT2	145	1989	73865	26936	20	26390	713	1295	16125
QA2-AE Test2/ CT3	182	987	54553	25504	22	26808	650	2066	12347
PA1-AE1 Test2/Tails	131	304	119323	20175	16	26092	551	35	12386
PA1-AE1 Test2/CT1	125	4967	71098	25275	18	26226	658	341	15257
PA1-AE1 Test2/CT2	202	2649	60889	27334	22	29176	733	1000	14076
PA1-AE1 Test2/CT3	215	1014	45502	23050	23	28866	663	1574	11225
ZA5-AE Test2/Tails	159	296	97228	20426	14	24450	539	60	14851
ZA5-AE Test2/CT1	147	6510	67528	23166	16	25033	681	334	18088
ZA5-AE Test2/CT2	148	3996	56352	24312	18	25935	743	1650	17950
ZA5-AE Test2/CT3	205	1434	36279	22197	18	25919	671	2080	14874
ZA5-AE Test2/CC3									
YA4-AE Test2/Tails	71	65	68988	19675	15	15688	410	5	21289
YA4-AE Test2/CT1	78	1247	70091	26798	17	16302	599	70	23650
YA4-AE Test2/CT2	91	1535	72261	30131	20	20065	661	289	21420
YA4-AE Test2/CT3									
YA4-AE Test2/CC3									
XA3-AE LIMS M	30	224	553078	2376	2	2306	217	15	3101
XA3-AE MIMS M	137	304	296822	10816	8	8186	638	55	15907
XA3-AE MIMS NM	56	176	19849	18410	16	16937	459	47	20440

Analyte	Cr	Cu	Fe	K	Li	Mg	Mn	Mo	Na
Unit Symbol	mg/kg	mg/kg	mg/kg	mg/kg	mg/kg	mg/kg	mg/kg	mg/kg	mg/kg
Analysis Method	4A-ICP10	4A-ICP10	4A-ICP10	4A-ICP10	4A-ICP10	4A-ICP10	4A-ICP10	4A-ICP10	4A-ICP10
QA2-AE LIMS M	27	530	563887	933	2	1256	102	20	780
QA2-AE MIMS M	143	900	294467	11409	10	10903	543	69	11228
QA2-AE MIMS NM	119	462	37606	21728	19	22831	523	131	16290
PA1-AE1 LIMS M	24	310	570630	1131	<2	1513	75	18	983
PA1-AE1 MIMS M	137	1106	189321	15967	12	17505	505	95	14004
PA1-AE1 MIMS NM	156	841	31380	19791	18	26607	556	153	12652
ZA5-AE LIMS M	32	463	583114	889	3	1401	86	18	923
ZA5-AE MIMS M	190	1239	227784	12412	13	15455	644	75	13812
ZA5-AE MIMS NM	167	854	21698	17975	18	25161	524	139	15363
YA4-AE LIMS M	50	271	596798	1078	3	1051	234	11	1290
YA4-AE MIMS M	87	233	292017	11647	12	9622	675	16	14333
YA4-AE MIMS NM	54	134	32652	20590	17	16310	408	34	21798
XA3-AE Test3/Tails	33	34	19790	18525	20	17118	452	10	20840
XA3-AE Test3/CT1	54	1644	42576	24857	20	16513	693	186	24442
XA3-AE Test3/CT2	119	1553	44778	25555	20	17135	741	781	22122
XA3-AE Test3/CT3	40	843	29021	23760	20	20461	673	1983	13891
XA3-AE Test3/CC3	94	410	31044	19130	21	21448	649	1395	7259
XA3-AE Test3/M1	27	223	463472	1842	4	1754	187	13	2081
XA3-AE Test3/M2	76	300	216710	12632	11	9512	490	35	17347

Analyte	Ni	P	Pb	S	Ti	Zn
Unit Symbol	mg/kg	mg/kg	mg/kg	mg/kg	mg/kg	mg/kg
Analysis Method	4A-ICP10	4A-ICP10	4A-ICP10	4A-ICP10	4A-ICP11	4A-ICP13
XA3-AE Test1/ RC1	75	250	<10	109	836	175
XA3-AE Test 1/RC2	157	535	38	21167	1674	402
XA3-AE Test 1/RC3	177	609	34	22258	1706	496
XA3-AE Test 1/RC4	188	614	32	23314	1787	581
XA3-AE Test 1/Tails	305	661	16	33903	1446	558
QA2-AE Test1/ RC1	178	299	16	152	1356	687
QA2-AE Test1/ RC2	208	384	23	196	1813	874
QA2-AE Test1/ RC3	298	500	32	43183	2329	1595
QA2-AE Test1/ RC4	328	550	41	34887	2436	2408
QA2-AE Test1/ Tails	404	634	23	35079	2157	1940
PA1-AC1 Test1/RC1	147	296	14	191	1844	966
PA1-AC1 Test1/RC2	243	491	43	31672	2956	1785
PA1-AC1 Test1/RC3	283	487	46	40458	2772	2655
PA1-AC1 Test1/RC4	299	534	45	34412	2824	3442
PA1-AC1 Test1/Tails	568	581	21	47826	2207	3136
ZA5-AE Test1/RC1						
ZA5-AE Test1/RC2	176	345	50	24583	2492	1414
ZA5-AE Test1/RC3	275	445	50	44458	2574	2838
ZA5-AE Test1/RC4	306	508	39	33235	2670	3532
ZA5-AE Test1/Tails	449	617	19	43481	2322	2815
YA4-AE Test1/RC1						
YA4-AE Test1/RC2	82	250	20	13697	838	89
YA4-AE Test1/RC3	201	534	41	28749	1695	289
YA4-AE Test1/RC4	196	571	33	26069	1686	372
YA4-AE Test1/Tails	177	564	15	27997	1322	236

Analyte	Ni	P	Pb	S	Ti	Zn
Unit Symbol	mg/kg	mg/kg	mg/kg	mg/kg	mg/kg	mg/kg
Analysis Method	4A-ICP10	4A-ICP10	4A-ICP10	4A-ICP10	4A-ICP11	4A-ICP13
XA3-AE Test2/Tails	309	590	12	35943	1389	520
XA3-AE Test2/CT1	177	503	24	23487	1607	428
XA3-AE Test2/CT2	134	489	35	18484	2056	362
XA3-AE Test2/CT3	54	301	19	8744	2247	184
XA3-AE Test2/CC3						
QA2-AE Test2/ Tails	414	619	18	37859	2059	1832
QA2-AE Test2/ CT1	308	508	29	36036	2303	1410
QA2-AE Test2/ CT2	282	464	32	32917	2786	1077
QA2-AE Test2/ CT3	175	339	25	23912	2842	581
PA1-AE1 Test2/Tails	591	579	18	50172	2213	3163
PA1-AE1 Test2/CT1	280	484	33	33447	2685	2048
PA1-AE1 Test2/CT2	218	474	34	24591	3528	1520
PA1-AE1 Test2/CT3	151	420	22	15951	3995	915
ZA5-AE Test2/Tails	467	628	18	39958	2348	2967
ZA5-AE Test2/CT1	248	437	32	28685	2626	2222
ZA5-AE Test2/CT2	182	390	42	22577	2836	1638
ZA5-AE Test2/CT3	99	258	28	14183	2826	851
ZA5-AE Test2/CC3						
YA4-AE Test2/Tails	185	582	13	29553	1370	234
YA4-AE Test2/CT1	152	526	47	25740	1859	215
YA4-AE Test2/CT2	141	508	60	23944	2463	203
YA4-AE Test2/CT3						
YA4-AE Test2/CC3						
XA3-AE LIMS M	2147	98	25	178954	268	117
XA3-AE MIMS M	1072	277	21	92824	790	385
XA3-AE MIMS NM	41	713	15	6627	1659	499

Analyte	Ni	P	Pb	S	Ti	Zn
Unit Symbol	mg/kg	mg/kg	mg/kg	mg/kg	mg/kg	mg/kg
Analysis Method	4A-ICP10	4A-ICP10	4A-ICP10	4A-ICP10	4A-ICP11	4A-ICP13
QA2-AE LIMS M	3091	29	25	180058	188	195
QA2-AE MIMS M	1686	455	27	109497	1304	1785
QA2-AE MIMS NM	156	665	22	18759	2333	1844
PA1-AE1 LIMS M	3433	23	25	180603	199	301
PA1-AE1 MIMS M	1150	514	25	84894	1820	2992
PA1-AE1 MIMS NM	95	574	19	14999	2471	2951
ZA5-AE LIMS M	3122	19	28	185565	169	260
ZA5-AE MIMS M	1149	404	27	86963	1676	2479
ZA5-AE MIMS NM	55	624	20	8461	2565	2672
YA4-AE LIMS M	1765	44	28	192866	105	48
YA4-AE MIMS M	962	317	24	101247	743	194
YA4-AE MIMS NM	71	577	17	13419	1528	252
XA3-AE Test3/Tails	48	721	16	6499	1733	506
XA3-AE Test3/CT1	78	529	31	10043	2036	1012
XA3-AE Test3/CT2	86	500	36	10243	2277	919
XA3-AE Test3/CT3	56	319	30	265	2489	417
XA3-AE Test3/CC3	56	207	38	121	1968	211
XA3-AE Test3/M1	1800	61	25	156134	179	87
XA3-AE Test3/M2	901	431	22	95265	901	451

Pre-combusted
Not enough sample material, detection limits do not apply
Analysis changed to AR due to sample type

Analysis Report

Client:	GTK Mintec Att: Tero Korhonen	**Report ID:**	OR2215
		Reference / batch ID:	BatCircle 2.0 01/2023 4A-ICP
		Date received:	21.12.2022-11.1.2023
		Sample type:	Pulverized rock
		Number of samples:	30
		Report Date:	9.10.2023

Analytical method(s):

4A-ICP	Four acid digestion and multielement analysis with ICP-OES

Laboratory location:	Outokumpu, Finland
Notes:	Samples that contained more than 25% of carbon were combusted before analysis. The K results for samples in tests QA2-AE and PA1-AE1 are only indicative due to failed quality control. It was discussed with Tero Korhonen that the K results can be reported as indicative and no reanalysis is needed in this case.

CRS Laboratories Oy
Tutkijankatu 1, 83500 Outokumpu, FINLAND
outokumpu@crs.fi
www.crs.fi

Reported by:
Terhi Kirkkala
Chemist

Analysis Order Headline	Lab-ID	Analyte Unit Symbol Analysis Method	Ag mg/kg 4A-ICP	Al mg/kg 4A-ICP	As mg/kg 4A-ICP	Ca mg/kg 4A-ICP	Cd mg/kg 4A-ICP	Co mg/kg 4A-ICP
BatCirecle XA3-AE Test 4	116821-1	XA3-AE Test4/Tails	<3	69401	<5	18959	4	9
	116821-2	XA3-AE Test34/CT1	3	70881	14	18789	3	33
	116821-3	XA3-AE Test4/CT2	<3	53596	16	15802	3	39
	116821-4	XA3-AE Test4/CT3	5	41218	10	10014	2	29
	116821-5	XA3-AE Test4/CC3	10	41404	8	9368	1	34
	116821-6	XA3-AE Test4/M1	<3	7449	<5	2091	10	119
BatCirecle YA4-AE Test 4 3.1.:	117519-1	YA4-AE Test4/Tails	<3	84493	<5	18981	2	15
	117519-2	YA4-AE Test4/CT1	5	62990	10	11780	3	19
	117519-3	YA4-AE Test4/CT2	4	58542	11	10063	3	20
	117519-4	YA4-AE Test4/CT3	<3	8168	<5	1032	<1	2
	117519-5	YA4-AE Test4/CC3	<3	4060	<5	467	2	3
	117519-6	YA4-AE Test4/M1	<3	8543	<5	2016	10	117
BatCirecle ZA5-AE Test 4	117671-1	ZA5-AE Test4/Tails	<3	70899	<5	23750	36	16
	117671-2	ZA5-AE Test4/CT1	8	84831	6	30778	21	19
	117671-3	ZA5-AE Test4/CT2	8	78969	7	30916	20	20
	117671-4	ZA5-AE Test4/CT3	<3	24112	<5	9288	4	7
	117671-5	ZA5-AE Test4/CC3	<3	6049	<5	2130	<1	3
	117671-6	ZA5-AE Test4/M1	<3	8981	<5	3997	15	154
BatCirecle QA2-AE Test 4	117825-1	QA2-AE Test4/ Tails	<3	70085	<5	20026	22	15
	117825-2	QA2-AE Test4/ CT1	7	79702	7	21485	14	19
	117825-3	QA2-AE Test4/ CT2	6	70556	7	19901	13	17
	117825-4	QA2-AE Test4/ CT3	<3	17246	<5	4870	2	6
	117825-5	QA2-AE Test4/CC3	<3	6158	<5	1580	<1	2
	117825-6	QA2-AE Test4/M1	<3	7773	<5	3039	11	156
BatCirecle PA1-AE1 Test 4	117906-1	PA1-AE1 Test4/ Tails	<3	68947	<5	25600	40	26
	117906-2	PA1-AE1 Test4/ CT1	4	83162	<5	30915	18	20
	117906-3	PA1-AE1 Test4/ CT2	4	77721	<5	30246	16	20
	117906-4	PA1-AE1 Test4/ CT3	<3	26228	<5	10118	4	8
	117906-5	PA1-AE1 Test4/ CC3	<3	9552	<5	3374	1	3
	117906-6	PA1-AE1 Test4/ M1	2	10644	<5	3832	13	103

Analyte	Cr	Cu	Fe	K	Li	Mg	Mn	Mo	Na
Unit Symbol	mg/kg	mg/kg	mg/kg	mg/kg	mg/kg	mg/kg	mg/kg	mg/kg	mg/kg
Analysis Method	4A-ICP	4A-ICP	4A-ICP	4A-ICP	4A-ICP	4A-ICP	4A-ICP	4A-ICP	4A-ICP
XA3-AE Test4/Tails	36	125	21464	18442	16	17205	446	15	21073
XA3-AE Test34/CT1	334	1139	66289	22412	16	16446	784	455	20347
XA3-AE Test4/CT2	368	1058	74921	18576	12	11795	736	591	17883
XA3-AE Test4/CT3	152	784	58628	12047	12	11355	600	1692	8926
XA3-AE Test4/CC3	130	863	76485	12167	18	14485	758	2124	6601
XA3-AE Test4/M1	52	240	546551	1650	<2	1320	226	15	2564
YA4-AE Test4/Tails	68	80	38403	25434	20	19761	473	12	28224
YA4-AE Test4/CT1	288	1670	82975	24390	18	17525	734	144	18387
YA4-AE Test4/CT2	295	1509	84264	22192	16	15130	702	370	16628
YA4-AE Test4/CT3	7	112	11572	2497	3	3080	103	203	1209
YA4-AE Test4/CC3	<5	47	6373	1136	2	1802	58	108	434
YA4-AE Test4/M1	97	318	512090	1977	<2	1663	580	18	2974
ZA5-AE Test4/Tails	73	395	19941	21743	16	26003	530	47	15808
ZA5-AE Test4/CT1	355	5452	52390	22801	19	25743	808	845	16933
ZA5-AE Test4/CT2	347	4766	57431	20266	17	21080	770	1092	16411
ZA5-AE Test4/CT3	40	1154	21195	5678	6	6752	253	913	4428
ZA5-AE Test4/CC3	8	278	7907	1372	<2	2134	84	475	896
ZA5-AE Test4/M1	59	577	569740	1768	3	2644	298	26	2158
QA2-AE Test4/ Tails	93	172	34124	22172	18	23239	489	37	16889
QA2-AE Test4/ CT1	315	3361	73365	25052	22	25888	796	632	16196
QA2-AE Test4/ CT2	288	2768	71039	20696	17	20644	704	813	14715
QA2-AE Test4/ CT3	28	562	21225	4706	6	5324	189	680	2994
QA2-AE Test4/CC3	13	181	9600	1531	2	2288	85	502	790
QA2-AE Test4/M1	64	626	460740	1800	<2	2060	395	26	1859
PA1-AE1 Test4/ Tails	98	691	32885	21875	18	29589	592	54	13880
PA1-AE1 Test4/ CT1	293	2637	51941	23010	20	27205	764	623	13847
PA1-AE1 Test4/ CT2	300	2169	55179	23040	20	24739	745	737	12894
PA1-AE1 Test4/ CT3	44	571	22720	7505	9	9132	270	659	3634
PA1-AE1 Test4/ CC3	16	185	11078	2592	4	4164	123	494	949
PA1-AE1 Test4/ M1	53	403	426442	2816	4	3261	237	27	2663

Analyte	Ni	P	Pb	S	Ti	Zn
Unit Symbol	mg/kg	mg/kg	mg/kg	mg/kg	mg/kg	mg/kg
Analysis Method	4A-ICP	4A-ICP	4A-ICP	4A-ICP	4A-ICP	4A-ICP
XA3-AE Test4/Tails	51	738	17	7616	1754	627
XA3-AE Test34/CT1	97	573	19	9746	2152	352
XA3-AE Test4/CT2	119	575	20	9259	1881	339
XA3-AE Test4/CT3	113	428	44	119	1530	249
XA3-AE Test4/CC3	162	524	60	140	1890	269
XA3-AE Test4/M1	2132	30	25	173248	140	93
YA4-AE Test4/Tails	93	822	24	17706	1834	329
YA4-AE Test4/CT1	121	527	30	18777	2074	234
YA4-AE Test4/CT2	127	513	27	17527	2168	263
YA4-AE Test4/CT3	18	59	<5	54	362	35
YA4-AE Test4/CC3	12	33	<5	34	187	19
YA4-AE Test4/M1	1727	45	27	172010	126	65
ZA5-AE Test4/Tails	50	732	21	8481	2700	3114
ZA5-AE Test4/CT1	87	413	34	14467	3016	1852
ZA5-AE Test4/CT2	102	393	33	14249	2813	1724
ZA5-AE Test4/CT3	47	111	11	96	911	483
ZA5-AE Test4/CC3	16	32	<5	99	300	98
ZA5-AE Test4/M1	2934	27	28	201922	298	409
QA2-AE Test4/ Tails	140	713	23	18552	2344	2013
QA2-AE Test4/ CT1	184	495	34	28405	2785	1297
QA2-AE Test4/ CT2	194	445	30	25368	2481	1162
QA2-AE Test4/ CT3	63	103	9	80	714	250
QA2-AE Test4/CC3	33	42	5	46	342	74
QA2-AE Test4/M1	3048	34	24	149416	181	301
PA1-AE1 Test4/ Tails	104	708	22	16931	2558	3666
PA1-AE1 Test4/ CT1	112	475	29	16103	2933	1635
PA1-AE1 Test4/ CT2	128	452	28	15244	3210	1468
PA1-AE1 Test4/ CT3	58	147	9	140	1407	424
PA1-AE1 Test4/ CC3	33	61	<5	79	737	121
PA1-AE1 Test4/ M1	3071	32	23	151544	285	476

Pre-combusted
Not enough sample material, detection limits do not apply
Indicative result

Analysis Report

Client:	GTK Mintec	**Report ID:**	OR2493
	Att: Tero Korhonen	**Reference / batch ID:**	BatCirecle Tests 5
		Date received:	15.3.2023
		Sample type:	Pulverized rock
		Number of samples:	21
		Report Date:	27.3.2023

Analytical method(s):

4A-ICP	Four acid digestion and multielement analysis with ICP-OES

Laboratory location: Outokumpu, Finland

Notes:

Test results are representative only of material submitted for analysis. This report shall not be reproduced except in full, without written approval of the laboratory.

CRS Laboratories Oy
Tutkijankatu 1, 83500 Outokumpu, FINLAND
outokumpu@crs.fi
www.crs.fi

Reported by:
Tini Ruohola
Assistant Chemist

	Analyte	Ag	Al	As	Ca	Cd
	Unit Symbol	mg/kg	mg/kg	mg/kg	mg/kg	mg/kg
Lab-ID	Analysis Method	4A-ICP	4A-ICP	4A-ICP	4A-ICP	4A-ICP
124023-1	QA2-AE Test 5 M1	<3	7690	<5	3055	13
124023-2	QA2-AE Test 5 Tails	<3	70453	<5	20344	22
124023-3	QA2-AE Test 5 CT1	4	57532	21	16728	12
124023-4	QA2-AE Test 5 CT2	6	59729	24	17062	13
124023-5	QA2-AE Test 5 CT3	<3	29156	15	8676	7
124023-6	QA2-AE Test 5 CT4	3	42745	38	12637	10
124023-7	QA2-AE Test 5 CC4	<3	6295	6	1929	2
124023-9	PA1-AE Test 5 M1	<3	10868	<5	4027	14
124023-10	PA1-AE Test 5 Tails	3	68188	<5	25915	40
124023-11	PA1-AE Test 5 CT1	4	64672	5	25031	16
124023-12	PA1-AE Test 5 CT2	5	66161	<5	25175	16
124023-13	PA1-AE Test 5 CT3	<3	49331	<5	19123	12
124023-14	PA1-AE Test 5 CT4	<3	46233	6	17817	12
124023-15	PA1-AE Test 5 CC4	<3	13372	<5	5064	4
124023-17	ZA5-AE Test 5 M1	<3	9662	<5	4333	14
124023-18	ZA5-AE Test 5 Tails	<3	73383	<5	24398	38
124023-19	ZA5-AE Test 5 CT1	7	66120	6	24251	17
124023-20	ZA5-AE Test 5 CT2	7	67506	<5	24601	17
124023-21	ZA5-AE Test 5 CT3	6	53051	7	19819	14
124023-22	ZA5-AE Test 5 CT4	5	55704	7	21193	14
124023-23	ZA5-AE Test 5 CC4	<3	8414	<5	3092	2

Analyte	Co	Cr	Cu	Fe	K
Unit Symbol	mg/kg	mg/kg	mg/kg	mg/kg	mg/kg
Analysis Method	4A-ICP	4A-ICP	4A-ICP	4A-ICP	4A-ICP
QA2-AE Test 5 M1	158	61	630	474761	1824
QA2-AE Test 5 Tails	17	93	159	34476	22133
QA2-AE Test 5 CT1	17	239	2318	70168	18292
QA2-AE Test 5 CT2	18	248	2381	73443	18150
QA2-AE Test 5 CT3	11	121	1270	45037	8582
QA2-AE Test 5 CT4	19	223	1972	69937	12455
QA2-AE Test 5 CC4	5	39	360	18111	1603
PA1-AE Test 5 M1	106	45	405	458130	2896
PA1-AE Test 5 Tails	27	95	419	32077	21743
PA1-AE Test 5 CT1	18	356	3133	54573	20280
PA1-AE Test 5 CT2	18	366	3105	55016	20365
PA1-AE Test 5 CT3	14	162	2275	47464	15283
PA1-AE Test 5 CT4	18	169	2240	48756	14124
PA1-AE Test 5 CC4	6	62	746	25006	4096
ZA5-AE Test 5 M1	156	55	604	475215	1947
ZA5-AE Test 5 Tails	16	80	400	20048	22783
ZA5-AE Test 5 CT1	15	381	4126	51989	18061
ZA5-AE Test 5 CT2	15	388	4089	52979	17881
ZA5-AE Test 5 CT3	12	159	3081	46038	13796
ZA5-AE Test 5 CT4	14	200	3452	53382	14342
ZA5-AE Test 5 CC4	4	37	752	17544	1965

Analyte	Li	Mg	Mn	Mo	Na
Unit Symbol	mg/kg	mg/kg	mg/kg	mg/kg	mg/kg
Analysis Method	4A-ICP	4A-ICP	4A-ICP	4A-ICP	4A-ICP
QA2-AE Test 5 M1	3	2005	286	28	1903
QA2-AE Test 5 Tails	19	23399	491	36	17037
QA2-AE Test 5 CT1	17	19159	787	681	11327
QA2-AE Test 5 CT2	17	19036	807	710	12078
QA2-AE Test 5 CT3	8	9165	472	697	5814
QA2-AE Test 5 CT4	12	13174	714	1093	8549
QA2-AE Test 5 CC4	3	2315	178	443	1046
PA1-AE Test 5 M1	3	3430	166	32	2783
PA1-AE Test 5 Tails	19	29268	579	54	13906
PA1-AE Test 5 CT1	17	21520	690	585	10662
PA1-AE Test 5 CT2	17	22017	700	589	11026
PA1-AE Test 5 CT3	13	16594	562	671	7990
PA1-AE Test 5 CT4	13	15852	562	748	7380
PA1-AE Test 5 CC4	8	5582	245	628	2628
ZA5-AE Test 5 M1	2	2930	267	25	2391
ZA5-AE Test 5 Tails	17	27756	552	45	16913
ZA5-AE Test 5 CT1	15	20747	725	785	13273
ZA5-AE Test 5 CT2	15	20848	727	775	13836
ZA5-AE Test 5 CT3	11	15341	592	869	10624
ZA5-AE Test 5 CT4	14	16048	658	1108	11314
ZA5-AE Test 5 CC4	4	2824	172	621	1484

Analyte	Ni	P	Pb	S	Ti
Unit Symbol	mg/kg	mg/kg	mg/kg	mg/kg	mg/kg
Analysis Method	4A-ICP	4A-ICP	4A-ICP	4A-ICP	4A-ICP
QA2-AE Test 5 M1	3051	38	23	144966	195
QA2-AE Test 5 Tails	141	761	24	18709	2365
QA2-AE Test 5 CT1	204	372	29	512	1920
QA2-AE Test 5 CT2	218	388	34	618	1959
QA2-AE Test 5 CT3	144	193	17	209	1130
QA2-AE Test 5 CT4	227	298	28	377	1697
QA2-AE Test 5 CC4	71	67	9	58	336
PA1-AE Test 5 M1	3150	34	24	143240	307
PA1-AE Test 5 Tails	102	765	25	16940	2572
PA1-AE Test 5 CT1	112	392	24	14692	2623
PA1-AE Test 5 CT2	114	403	25	14728	2653
PA1-AE Test 5 CT3	102	301	21	378	1988
PA1-AE Test 5 CT4	121	284	23	433	2007
PA1-AE Test 5 CC4	60	96	15	131	792
ZA5-AE Test 5 M1	2919	28	25	143758	258
ZA5-AE Test 5 Tails	52	790	24	8299	2729
ZA5-AE Test 5 CT1	79	325	25	11628	2532
ZA5-AE Test 5 CT2	82	330	26	11529	2545
ZA5-AE Test 5 CT3	73	255	24	339	1773
ZA5-AE Test 5 CT4	85	275	25	358	1887
ZA5-AE Test 5 CC4	31	58	9	68	380

Analyte	Zn
Unit Symbol	mg/kg
Analysis Method	4A-ICP
QA2-AE Test 5 M1	290
QA2-AE Test 5 Tails	2043
QA2-AE Test 5 CT1	1090
QA2-AE Test 5 CT2	1152
QA2-AE Test 5 CT3	616
QA2-AE Test 5 CT4	1000
QA2-AE Test 5 CC4	196
PA1-AE Test 5 M1	472
PA1-AE Test 5 Tails	3605
PA1-AE Test 5 CT1	1425
PA1-AE Test 5 CT2	1450
PA1-AE Test 5 CT3	1095
PA1-AE Test 5 CT4	1057
PA1-AE Test 5 CC4	325
ZA5-AE Test 5 M1	422
ZA5-AE Test 5 Tails	3316
ZA5-AE Test 5 CT1	1425
ZA5-AE Test 5 CT2	1476
ZA5-AE Test 5 CT3	1145
ZA5-AE Test 5 CT4	1263
ZA5-AE Test 5 CC4	229

Analysis Report

Client:	GTK Mintec Att: Tero Korhonen	**Report ID:**	OR2880
		Reference / batch ID:	BF BatCircle 2, 06_2023 4A-ICP
		Date received:	10.5.-19.5.2023
		Sample type:	Pulverized rock
		Number of samples:	24
		Report Date:	5.10.2023

Analytical method(s):

4A-ICP	Four acid digestion and multielement analysis with ICP-OES

Laboratory location:	Outokumpu, Finland
Notes:	Samples that contained more than 25% of carbon were combusted before analysis. The results for sample ZA5-AE CT3 are only indicative due to a failed quality control sample and there was not enough sample material left for reanalysis.

CRS Laboratories Oy
Tutkijankatu 1, 83500 Outokumpu, FINLAND
outokumpu@crs.fi
www.crs.fi

Reported by:
Terhi Kirkkala
Chemist

Analysis Order Headline	Lab-ID	Analyte Unit Symbol Analysis Method	Ag mg/kg 4A-ICP	Al mg/kg 4A-ICP	As mg/kg 4A-ICP	Ca mg/kg 4A-ICP	Cd mg/kg 4A-ICP
BF BATCircle 2, Aitolampi QA2-AE Test 6 10.5.2023	128562-1	QA2-AE Test 6/M	<3	8065	<5	3442	14
	128562-2	QA2-AE Test 6/Tails	<3	71490	<5	20752	22
	128562-3	QA2-AE Test 6/CT1	6	59507	<5	16756	14
	128562-4	QA2-AE Test 6/CT2	7	63559	<5	17954	14
	128562-5	QA2-AE Test 6/CT3	<3	31183	7	8975	7
	128562-6	QA2-AE Test 6/CT4	<3	14943	<5	4365	4
	128562-7	QA2-AE Test 6/CT5	<3	7723	<5	2230	2
	128562-8	QA2-AE Test 6/CC5	<3	5079	<5	1438	1
BF BATCircle 2, Aitolampi PA1-AE Test 6	128753-1	PA1-AE Test 6/M	<3	23339	<5	9531	21
	128753-2	PA1-AE Test 6/Tails	<3	64901	<5	24547	36
	128753-3	PA1-AE Test 6/CT1	5	70339	<5	26332	16
	128753-4	PA1-AE Test 6/CT2	<3	64775	7	25178	15
	128753-5	PA1-AE Test 6/CT3	<3	41515	6	16018	10
	128753-6	PA1-AE Test 6/CT4	<3	24137	<5	9338	6
	128753-7	PA1-AE Test 6/CT5	<3	13668	<5	4985	3
	128753-8	PA1-AE Test 6/CC5	<3	9253	<5	3170	2
BF BATCircle 2, Aitolampi ZA5-AE Test 6	129198-1	ZA5-AE Test 6/M	<3	13041	<5	5507	15
	129198-2	ZA5-AE Test 6/Tails	<3	75802	<5	25126	39
	129198-3	ZA5-AE Test 6/CT1	8	67024	5	24519	16
	129198-4	ZA5-AE Test 6/CT2	3	57352	8	21688	13
	129198-5	ZA5-AE Test6/CT3	4	52187	<5	19849	13
	129198-6	ZA5-AE Test 6/CT4	3	30916	6	11797	8
	129198-7	ZA5-AE Test 6/CT5	<3	18028	5	6897	4
	129198-8	ZA5-AE Test 6/CC5	<3	9434	<5	3465	2

Analyte	Co	Cr	Cu	Fe	K	Li	Mg	Mn	Mo
Unit Symbol	mg/kg	mg/kg	mg/kg	mg/kg	mg/kg	mg/kg	mg/kg	mg/kg	mg/kg
Analysis Method	4A-ICP	4A-ICP	4A-ICP	4A-ICP	4A-ICP	4A-ICP	4A-ICP	4A-ICP	4A-ICP
QA2-AE Test 6/M	155	78	610	564663	1934	6	2497	271	32
QA2-AE Test 6/Tails	15	93	127	37084	22187	20	23088	493	38
QA2-AE Test 6/CT1	16	358	2651	74703	19983	21	20727	755	556
QA2-AE Test 6/CT2	16	362	2530	76949	19711	20	20024	752	633
QA2-AE Test 6/CT3	10	105	1416	45961	9168	13	9646	423	717
QA2-AE Test 6/CT4	7	61	800	36361	4205	5	4998	255	697
QA2-AE Test 6/CT5	7	37	529	20175	2057	3	2738	167	570
QA2-AE Test 6/CC5	3	24	400	14689	1275	2	1933	127	423
PA1-AE Test 6/M	87	68	522	408695	6860	8	8146	279	48
PA1-AE Test6 /Tails	22	85	469	29746	20547	18	27194	543	49
PA1-AE Test 6/CT1	17	348	3020	58757	21492	29	23360	760	569
PA1-AE Test 6/CT2	17	173	2555	55335	20451	20	21670	705	584
PA1-AE Test 6/CT3	12	121	1777	42520	12843	12	14167	505	738
PA1-AE Test 6/CT4	9	75	1195	30932	7278	10	8729	341	1105
PA1-AE Test 6/CT5	6	49	775	22668	3937	7	5437	234	696
PA1-AE Test 6/CC5	4	35	580	18650	2581	5	3987	187	555
ZA5-AE Test 6/M	144	61	601	489424	2963	10	4231	261	31
ZA5-AE Test 6/Tails	16	85	529	22955	23154	20	28132	571	53
ZA5-AE Test 6/CT1	14	373	3889	56080	17995	17	20783	760	757
ZA5-AE Test 6/CT2	13	162	3085	50228	15229	15	17187	672	799
ZA5-AE Test 6/CT3	11	154	2694	47599	13599	13	15081	609	833
ZA5-AE Test 6/CT4	12	90	1882	34019	7984	9	9214	411	803
ZA5-AE Test 6/CT5	5	50	1241	25158	4482	6	5487	280	709
ZA5-AE Test 6/CC5	4	32	829	18766	2230	3	3099	194	543

Analyte	Na	Ni	P	Pb	S	Ti	Zn
Unit Symbol	mg/kg	mg/kg	mg/kg	mg/kg	mg/kg	mg/kg	mg/kg
Analysis Method	4A-ICP	4A-ICP	4A-ICP	4A-ICP	4A-ICP	4A-ICP	4A-ICP
QA2-AE Test 6/M	1986	3039	28	27	171568	246	296
QA2-AE Test 6/Tails	16988	155	741	22	19411	2450	2008
QA2-AE Test 6/CT1	12310	167	399	27	23257	2427	1246
QA2-AE Test 6/CT2	12810	176	405	22	23640	2453	1269
QA2-AE Test 6/CT3	6269	114	210	17	215	1148	657
QA2-AE Test 6/CT4	2913	78	112	14	114	631	328
QA2-AE Test 6/CT5	1407	54	70	11	74	376	179
QA2-AE Test 6/CC5	867	44	58	8	56	255	122
PA1-AE Test 6/M	5397	2337	189	24	147163	782	1265
PA1-AE Test 6/Tails	12917	85	685	20	15064	2436	3264
PA1-AE Test 6/CT1	11327	100	420	22	15106	2793	1470
PA1-AE Test 6/CT2	10645	103	403	20	515	2453	1351
PA1-AE Test 6/CT3	6801	83	264	15	397	1818	863
PA1-AE Test 6/CT4	3766	61	158	12	235	1233	514
PA1-AE Test 6/CT5	1912	48	97	11	124	810	280
PA1-AE Test 6/CC5	1166	41	78	10	91	577	183
ZA5-AE Test 6/M	3143	2697	52	26	169689	441	541
ZA5-AE Test 6/Tails	17273	59	777	21	9488	2838	3420
ZA5-AE Test 6/CT1	13505	72	325	22	11625	2569	1391
ZA5-AE Test 6/CT2	11696	70	281	20	327	1905	1202
ZA5-AE Test 6/CT3	10532	63	235	16	345	1706	1089
ZA5-AE Test 6/CT4	6276	49	165	15	206	1102	693
ZA5-AE Test 6/CT5	3549	37	100	11	115	689	413
ZA5-AE Test 6/CC5	1780	27	60	8	69	398	227

Pre-combusted
Not enough sample material, detection limits do not apply
Indicative result